Innovations in Comfort, Energy Efficiency, and Safety Solutions for Buildings

British Columbia, Canada

2021
Product Range Overview

BELIMO®

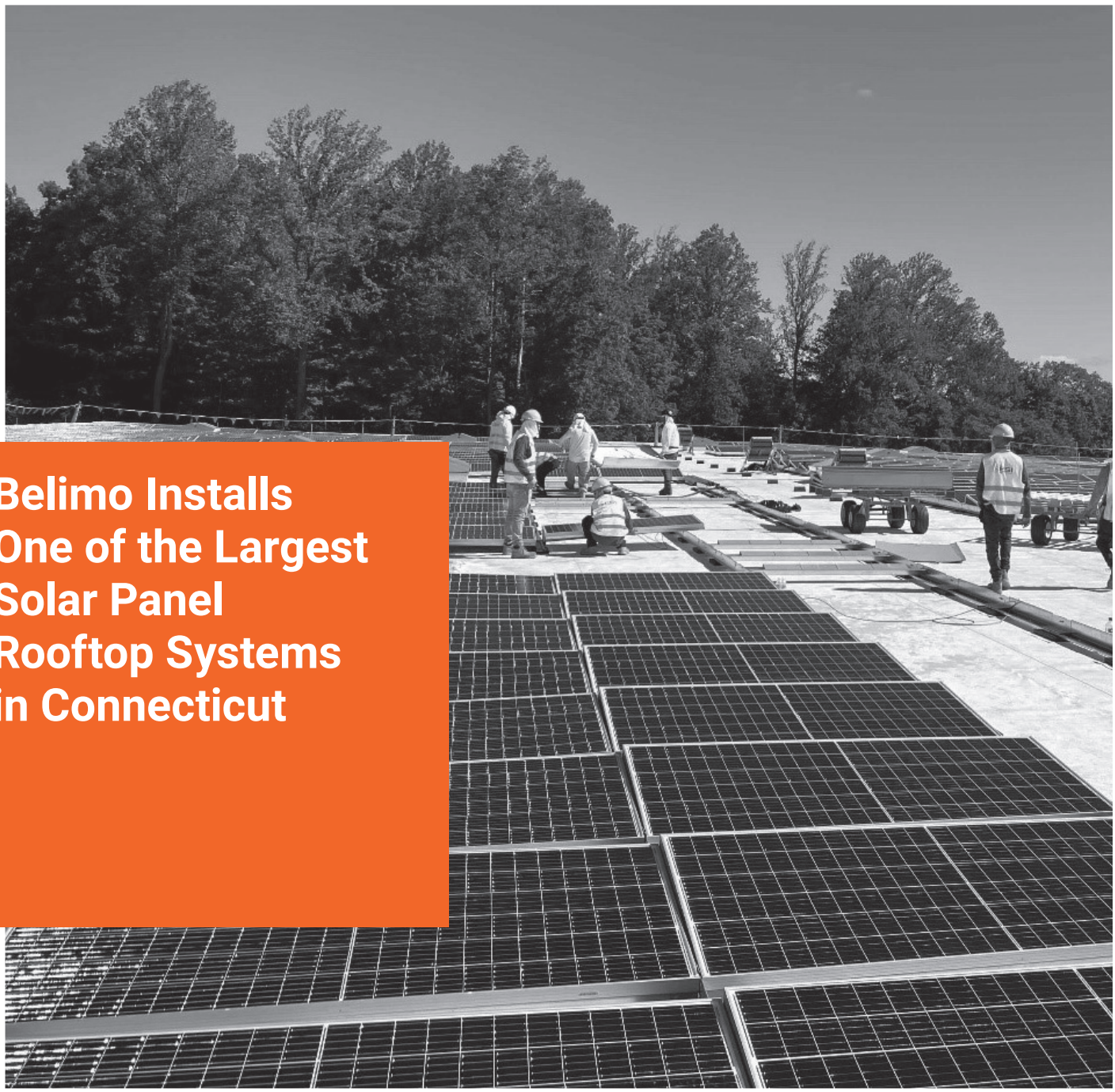

Belimo Installs One of the Largest Solar Panel Rooftop Systems in Connecticut

Leading by Example

In 2020, the Belimo Americas headquarters installed a 900 kW PV rooftop system, one of Connecticut's largest installations. This system is a natural renewable energy source that will meet 25% of the building's electricity demand. The project is another step in Belimo's mission to reduce energy consumption and lower our environmental impact.

Belimo strives to be environmentally friendly, from the products we offer to the way we operate our facilities.

Discover more
www.belimo.ca

BELIMO®

PMB, GMB(X), and AMB(X) Non Fail-Safe Damper Actuator Product Range

5-year warranty

			Power Supply			Power Consumption		Running Time	Housing Type		Drive Type	Custom Options		Control Input						Control Input MFT				Position Feedback				Bulk Pack
			AC 24 V ± 20%, 50/60 Hz VDC ±10%	AC 24...240 V +10%/- 20%, 50/60 Hz DC 24...125 V ± 10%	AC 100...240 V ±10%	VA Rating	Wattage Running (Holding)	Motor Drive (Default)	NEMA 1, 2, or 4X	● = Heater Built-in NEMA Housing Y or H = OPTIONAL Heater**	Rotary "M", Linear "L"	Select Mechanical Coupler	Select Electrical Connection	On/Off	Floating Point	2...10 V or 4...20 mA (w/500 Ω Resistor)	Honeywell Series 90, 0...135 Ω	BACnet: MS/TP or Modbus RTU (1) BACnet/IP or Modbus TCP (2)	0.5...20 V Phasecut	On/Off	Floating Point	Start and Span adj., Start 0.5...30 V Span 2.5...32 V	PWM adj., 0.02...50 Seconds	2...10 V (Default) Adjustable with MFT	Digital (1), Resistive Feedback	SPDT, 3A (0.5A Inductive) @ 250 V	Optional Accessories: Aux. Switch (S1A, S2A), Potentiometer (P..A GR)	Quantity of Actuators in Bulk Pack
PMB Series 1400 in-lb [160 Nm]		PMBUP-3-T		●		19	20 (3.5)	35	4X	●	M			●	●											2		
		PMBUP-MFT-T		●		19	20 (3.5)	35	4X	●	M			●	●	●		1		●	●			●		2		
GMB Series 360 in-lb [40 Nm] Approx. 90 sq.ft.		GMB24-3	●			6	4.0 (2.0)	150	2		M			●	●												●	
		GMB24-SR	●			6.5	4.5 (2.0)	150	2		M					●								●			●	
		GMB24-IP	●			8	5.5 (5)	150	1		M							2						●	1		●	
		GM24A-MOD	●			7	4 (1.6)	150	2		M							1							1		●	
		GMB24-MFT	●			7	4.0 (1.5)	150	2		M									●	●	●	●	●			●	
GMX Series 360 in-lb [40 Nm] Approx. 90 sq.ft.	Customizable*	GMX24-3	●			6	4.0 (2.0)	150	2		M	●	●	●	●												●	
		GMX24-3-T N4	●			6	4.0 (2.0)	150	4X	Y	M	●	●	●	●												●	
		GMX24-SR	●			6.5	4.5 (2.0)	150	2		M	●	●			●								●			●	
		GMX24-SR-T N4	●			6.5	4.5 (2.0)	150	4X	Y	M	●	●			●								●			●	
		GMX24-PC	●			7	4.0 (1.5)	150	2		M	●	●						●					●			●	
		GMX120-3			●	7	4.0 (2.0)	150	2		M	●	●	●	●												●	
		GMX24-MFT	●			7	4.0 (1.5)	75...300 (150)	2		M	●	●							●	●	●	●	●			●	
		GMX24-MFT N4	●			7	4.0 (1.5)	75...300 (150)	4X	Y	M	●	●							●	●	●	●	●			●	
		GMX24-MFT-T	●			7	4.0 (1.5)	75...300 (150)	1		M	●	●							●	●	●	●	●			●	
		GMX24-MFT-T N4	●			7	4.0 (1.5)	75...300 (150)	4X	Y	M	●	●							●	●	●	●	●			●	
AMB Series 180 in-lb [20 Nm] Approx. 45 sq.ft.		AMB24-3	●			5.5	2.5 (0.5)	95	2		M			●	●												●	
		AMB24-3-S	●			5.5	2.5 (0.5)	95	2		M			●	●											1	●	
		AMB24-SR	●			5	2.5 (0.4)	95	2		M					●								●			●	
		AMB24-SR-T	●			5	2.5 (0.4)	95	1		M					●								●			●	
		AMB24-IP	●			8	6 (3)	150	1		M							2						●	1		●	
		SM24A-MOD	●			6	3.5 (1.4)	150	2		M							1							1		●	
		AMB24-MFT	●			6	3.5 (1.3)	150	2		M									●	●	●	●	●			●	
		AMCB24-MFT	●			6	3.5 (1.3)	35	2		M									●	●	●	●	●			●	
		AMB120-3			●	7	3.0 (0.6)	95	2		M			●	●												●	
AMX Series 180 in-lb [20 Nm] Approx. 45 sq.ft.	Customizable*	AMX24-3	●			5.5	2.5 (0.5)	95	2		M	●	●	●	●												●	
		AMX24-3-T	●			5.5	2.5 (0.5)	95	1		M	●	●	●	●												●	
		AMX24-3-T N4	●			5.5	2.5 (0.5)	95	4X	Y	M	●	●	●	●												●	
		AMX24-SR	●			5	2.5 (0.4)	95	2		M	●	●			●								●			●	
		AMX24-SR-T	●			5	2.5 (0.4)	95	1		M	●	●			●								●			●	
		AMX24-SR-T N4	●			5	2.5 (0.4)	95	4X	Y	M	●	●			●								●			●	
		AMX24-PC	●			5.5	3.5 (1.3)	90	2		M	●	●						●					●			●	
		AMX120-3			●	7	3.0 (0.6)	95	2		M	●	●	●	●												●	
		AMX120-SR			●	7.5	4.0 (1.0)	95	2		M	●	●			●								●			●	
		AMX24-MFT	●			6	3.5 (1.3)	90...300 (150)	2		M	●	●							●	●	●	●	●			●	
		AMX24-MFT N4	●			6	3.5 (1.3)	90...300 (150)	4X	Y	M	●	●							●	●	●	●	●			●	
		AMX24-MFT-T N4	●			6	3.5 (1.3)	90...300 (150)	4X	Y	M	●	●							●	●	●	●	●			●	
		AMCX24-MFT	●			6	3.5 (1.3)	35...120 (35)	2		M	●	●							●	●	●	●	●			●	
		AMCX24-MFT-T N4	●			6	3.5 (1.3)	35...120 (35)	4X	Y	M	●	●							●	●	●	●	●			●	
		AMX24-MFT95	●			6	3.5 (1.3)	75...150 (150)	2		M	●	●				●							●			●	

See pages 1-6 through 1-9 of the Product Guide and Price List for additional generic product series specifications. Visit www.belimo.ca for detailed product specifications and downloadable data sheets. *See pages 4-13 to 4-16 of the Product Guide and Price List for customization options. **List Price does NOT include price for optional heater

X_10001 - 04/21 - Subject to change. © Belimo Aircontrols (USA), Inc.

AMQB(X), AHB(X), and AHQB(X) Non Fail-Safe Damper Actuator Product Range

5-year warranty

			Power Supply			Power Consumption		Running Time	Housing Type		Drive Type	Custom Options		Control Input						Control Input MFT				Position Feedback				Bulk Pack
			AC 24 V ± 20%, 50/60 Hz VDC ±10%	AC 24...240 V +10%/- 20%, 50/60 Hz DC 24...125 V ± 10%	AC 100...240 V ±10%	VA Rating	Wattage Running (Holding)	Motor Drive (Default)	NEMA 1, 2, or 4X	● = Heater Built-in NEMA Housing Y or H = OPTIONAL Heater	Rotary "M", Linear "L"	Select Mechanical Coupler	Select Electrical Connection	On/Off	Floating Point	2...10 V or 4...20 mA (w/500 Ω Resistor)	Honeywell Series 90, 0...135 Ω	BACnet: MS/TP or Modbus RTU (1) BACnet/IP or Modbus TCP (2)	0.5...20 V Phasecut	On/Off	Floating Point	Start and Span adj., Start 0.5...30 V Span 2.5...32 V	PWM adj., 0.02...50 Seconds	2...10 V (Default) Adjustable with MFT	Digital (1), Resistive Feedback	SPDT, 3A (0.5A Inductive) @ 250 V	Optional Accessories: Aux. Switch (S1A, S2A), Potentiometer (P..A GR)	Quantity of Actuators in Bulk Pack
AMQB(X) 140 in-lb [16 Nm]		AMQB24-1	●			26	15 (1.5)	7	2		M			●													●	
		AMQB24-MFT	●			26	15 (1.5)	7	2		M									●		●		●			●	
	C*	AMQX24-MFT	●			26	15 (1.5)	7...15 (7)	2		M	●	●							●		●		●			●	
AHB Series 100 lbf [450 N Force] 4" or 8" stroke		AHB24-3-100	●			4.5	2.0 (0.5)	150	2		L, 4"			●	●													
		AHB24-3-200	●			4.5	2.0 (0.5)	150	2		L, 8"			●	●													
		AHB24-SR-100	●			4.5	2.5 (0.5)	150	2		L, 4"					●								●				
		AHB24-SR-200	●			4.5	2.5 (0.5)	150	2		L, 8"					●								●				
AHX Series 100 lbf [450 N Force] 4", 8", 12" stroke	Customizable*	AHX24-3-100	●			4.5	2.0 (0.5)	150...450 (150)	2		L, 4"		●	●	●													
		AHX24-3-200	●			4.5	2.0 (0.5)	150...450 (150)	2		L, 8"		●	●	●													
		AHX24-3-300	●			4.5	2.0 (0.5)	150...450 (150)	2		L, 12"		●	●	●													
		AHX120-3-100			●	4.5	2.5 (0.5)	150...450 (150)	2		L, 4"		●	●	●													
		AHX120-3-200			●	4.5	2.5 (0.5)	150...450 (150)	2		L, 8"		●	●	●													
		AHX120-3-300			●	4.5	2.5 (0.5)	150...450 (150)	2		L, 12"		●	●	●													
		AHX24-SR-100	●			4.5	2.5 (0.5)	150...450 (150)	2		L, 4"		●			●								●				
		AHX24-SR-200	●			4.5	2.5 (0.5)	150...450 (150)	2		L, 8"		●			●								●				
		AHX24-MFT-100	●			6	3.5 (1.3)	150...450 (150)	2		L, 4"		●							●	●	●	●	●				
		AHX24-MFT-200	●			6	3.5 (1.3)	150...450 (150)	2		L, 8"		●							●	●	●	●	●				
		AHX24-MFT-300	●			6	3.5 (1.3)	150...450 (150)	2		L, 12"		●							●	●	●	●	●				
AHQB(X) 44 lbf [200 N Force]		AHQB24-1-100	●			23	13 (1.5)	7	2		L, 4"			●														
		AHQB24-MFT-100	●			23	13 (1.5)	7	2		L, 4"									●		●		●				
	C*	AHQX24-MFT-100	●			23	13 (1.5)	7...20 (7)	2		L, 4"		●							●		●		●				

See pages 1-6 through 1-9 of the Product Guide and Price List for additional generic product series specifications. Visit www.belimo.ca for detailed product specifications and downloadable data sheets.
*See pages 4-13 to 4-16 of the Product Guide and Price List for customization options.

X_10001 - 04/21 - Subject to change. © Belimo Aircontrols (USA), Inc.

NMB(X) and NMQB(X) Non Fail-Safe Damper Actuator Product Range

5-year warranty

			Power Supply			Power Consumption		Running Time	Housing Type		Drive Type	Custom Options		Control Input						Control Input MFT				Position Feedback				Bulk Pack
			AC 24 V ± 20%, 50/60 Hz VDC ±10%	AC 24...240 V +10%/- 20%, 50/60 Hz DC 24...125 V ± 10%	AC 100...240 V ±10%	VA Rating	Wattage Running (Holding)	Motor Drive (Default)	NEMA 1, 2, or 4X	● = Heater Built-in NEMA Housing Y or H = OPTIONAL Heater**	Rotary "M", Linear "L"	Select Mechanical Coupler	Select Electrical Connection	On/Off	Floating Point	2...10 V or 4...20 mA (w/500 Ω Resistor)	Honeywell Series 90, 0...135 Ω	BACnet: MS/TP or Modbus RTU (1) BACnet/IP or Modbus TCP (2)	0.5...20 V Phasecut	On/Off	Floating Point	Start and Span adj., Start 0.5...30 V Span 2.5...32 V	PWM adj., 0.02...50 Seconds	2...10 V (Default) Adjustable with MFT	Digital (1), Resistive Feedback	SPDT, 3A (0.5A Inductive) @ 250 V	Optional Accessories: Aux. Switch (S1A, S2A), Potentiometer (P..A GR)	Quantity of Actuators in Bulk Pack
NMB Series 90 in-lb [10 Nm] Approx. 22 sq. ft.		NMB24-3	●			4	2.0 (0.2)	95	2		M			●	●												●	
		NMCB24-3	●			4	2.5 (0.2)	45	2		M			●	●												●	
		NMB24-SR	●			5	2.5 (0.4)	95	2		M					●								●			●	
		NMB24-SR-T	●			5	2.5 (0.4)	95	1		M					●								●			●	
		NMCB24-SR	●			5	2.5 (0.4)	45	2		M					●								●			●	
		NMB24-IP	●			6	4 (3)	150	1		M							2						●	1		●	
		NM24A-MOD	●			6	3.5 (1.4)	150	2		M							1							1		●	
		NMB24-MFT	●			6	3.5 (1.3)	150	2		M	●	●							●	●	●	●	●			●	
NMX Series 90 in-lb [10 Nm] Approx. 22 sq. ft.	Customizable*	NMX24-3	●			4	2.0 (0.2)	95	2		M	●	●	●	●												●	
		NMX24-3-T	●			4	2.0 (0.2)	95	1		M	●	●	●	●												●	
		NMX24-3-T N4	●			4	2.0 (0.2)	95	4X	Y	M	●	●	●	●												●	
		NMX24-SR	●			5	2.5 (0.4)	95	2		M	●	●			●								●			●	
		NMX24-SR-T	●			5	2.5 (0.4)	95	1		M	●	●			●								●			●	
		NMX24-SR-T N4	●			5	2.5 (0.4)	95	4X	Y	M	●	●			●								●			●	
		NMX120-3			●	5.5	2.5 (0.6)	150	2		M	●	●	●	●												●	
		NMX120-SR			●	6.5	3.5 (1.0)	150	2		M	●	●			●								●			●	
		NMX24-MFT	●			6	3.5 (1.3)	45...150 (150)	2		M	●	●							●	●	●	●	●			●	
		NMX24-MFT N4	●			6	3.5 (1.3)	45...150 (150)	4X	Y	M	●	●							●	●	●	●	●			●	
		NMX24-MFT-T N4	●			6	3.5 (1.3)	45...150 (150)	4X	Y	M	●	●							●	●	●	●	●			●	
		NMX24-MFT95	●			6	3.5 (1.3)	45...150 (150)	2		M	●	●				●							●			●	
		NMCX24-MFT	●			5	3.0 (0.6)	20...75 (45)	2		M	●	●							●	●	●	●	●			●	
NMQB(X) 70 in-lb [8 Nm]		NMQB24-1	●			20	13 (1.5)	4	2		M			●													●	
		NMQB24-MFT	●			20	13 (1.5)	4	2		M									●		●		●			●	
	C*	NMQX24-MFT	●			23	13 (1.5)	4...20 (4)	2		M	●	●							●		●		●			●	

See pages 1-6 through 1-9 of the Product Guide andPrice List for additional generic product series specifications. Visit www.belimo.ca for detailed product specifications and downloadable data sheets.

*See pages 4-13 to 4-16 of the Product Guide and Price List for customization options.

**List Price does NOT include price for optional heater.

X_10001 - 04/21 - Subject to change. © Belimo Aircontrols (USA), Inc.

LMB(X) and LMQB(X) Non Fail-Safe Damper Actuator Product Range

5-year warranty

			Power Supply			Power Consumption		Running Time	Housing Type		Drive Type	Custom Options		Control Input						Control Input MFT				Position Feedback				Bulk Pack
			AC 24 V ± 20%, 50/60 Hz VDC ±10%	AC 24...240 V +10%/- 20%, 50/60 Hz DC 24...125 V ± 10%	AC 100...240 V ±10%	VA Rating	Wattage Running (Holding)	Motor Drive (Default)	NEMA 1, 2, or 4X	● = Heater Built-in NEMA Housing Y or H = OPTIONAL Heater	Rotary "M", Linear "L"	Select Mechanical Coupler	Select Electrical Connection	On/Off	Floating Point	2...10 V or 4...20 mA (w/500 Ω Resistor)	Honeywell Series 90, 0...135 Ω	BACnet: MS/TP or Modbus RTU (1) BACnet/IP or Modbus TCP (2)	0.5...20 V Phasecut	On/Off	Floating Point	Start and Span adj., Start 0.5...30 V Span 2.5...32 V	PWM adj., 0.02...50 Seconds	2...10 V (Default) Adjustable with MFT	Digital (1), Resistive Feedback	SPDT, 3A (0.5A Inductive) @ 250 V	Optional Accessories: Aux. Switch (S1A, S2A), Potentiometer (P..A GR)	Quantity of Actuators in Bulk Pack
LMB Series 45 in-lb [5 Nm] Approx. 11 sq. ft.		LMB24-3	●			2	1.5 (0.2)	95	2		M			●	●												●	
		LMCB24-3	●			2.5	1.5 (0.2)	35	2		M			●	●												●	
		LMB24-3.1	●			2	1.5 (0.2)	95	2		M			●	●												●	24
		LMB24-3-S	●			2	1.5 (0.2)	95	2		M			●	●											1	●	
		LMB24-3-T	●			2	1.5 (0.2)	95	1		M			●	●												●	
		LMCB24-3-T	●			2.5	1.5 (0.2)	35	1		M			●	●												●	
		LMB24-3-T.1	●			2	1.5 (0.2)	95	1		M			●	●												●	36
		LMB24-3-P5-T	●			2	1.5 (0.2)	95	1		M			●	●										5k Ω		●	
		LMB24-3-P5-T.1	●			2	1.5 (0.2)	95	1		M			●	●										5k Ω		●	36
		LMB24-3-P10-T	●			2	1.5 (0.2)	95	1		M			●	●										10k Ω		●	
		LMB120-3			●	4	2.0 (0.5)	95	2		M			●	●												●	
		LMB24-SR	●			3	1.5 (0.4)	95	2		M					●								●			●	
		LMCB24-SR	●			3	1.5 (0.4)	35	2		M					●								●			●	
		LMB24-SR.1	●			3	1.5 (0.4)	95	2		M					●								●			●	24
		LMB24-SR-T	●			3	1.5 (0.4)	95	1		M					●								●			●	
		LMCB24-SR-T	●			3	1.5 (0.4)	35	1		M					●								●			●	
		LMB24-SR-T.1	●			3	1.5 (0.4)	95	1		M					●								●			●	36
		LMB24-IP	●			4.5	3 (2)	150	1		M							2						●	1		●	
		LM24A-MOD	●			5	2.5 (1.3)	150	2		M							1							1		●	
		LMB24-MFT	●			5	2.5 (1.2)	150	2		M									●	●	●	●	●			●	
		LMB24-HM	●			2	1.5 (0.2)	95	1		M																●	
		LMB24-10P-HM	●			2	1.5 (0.2)	95	1		M														10k Ω		●	
LMX Series 45 in-lb [5 Nm] Approx. 11 sq. ft.	Customizable*	LMX24-3	●			2	1.5 (0.2)	95	2		M	●	●	●	●												●	
		LMX24-3-T	●			2	1.5 (0.2)	95	1		M	●	●	●	●												●	
		LMX24-SR	●			3	1.5 (0.4)	95	2		M	●	●			●								●			●	
		LMX24-SR-T	●			3	1.5 (0.4)	95	1		M	●	●			●								●			●	
		LMX120-3			●	4	2.0 (0.5)	150	2		M	●	●	●	●												●	
		LMX120-SR			●	4.5	2.5 (1.0)	150	2		M	●	●			●								●			●	
		LMX24-MFT	●			5	2.5 (1.2)	35...200 (150)	2		M	●	●							●	●	●	●	●			●	
		LMX24-MFT95	●			5	2.5 (1.2)	35...150 (150)	2		M	●	●				●							●			●	
LMQB(X) Series 35 in-lb [4 Nm]		LMQB24-1	●			20	13 (1.5)	2.5	2		M			●													●	
		LMQB24-MFT	●			20	13 (1.5)	2.5	2		M									●		●		●			●	
	C*	LMQX24-MFT	●			20	13 (1.5)	2.5...10 (2.5)	2		M	●	●							●		●		●			●	

See pages 1-6 through 1-9 of the Product Guide and Price List for additional generic product series specifications. Visit www.belimo.ca for detailed product specifications and downloadable data sheets.
*See pages 4-13 to 4-16 of the Product Guide and Price List for customization options.

X_10001 - 04/21 - Subject to change. © Belimo Aircontrols (USA), Inc.

LHB(X), LHQB(X), and CMB Non Fail-Safe Damper Actuator Product Range

5-year warranty

			Power Supply			Power Consumption		Running Time	Housing Type		Drive Type	Custom Options		Control Input						Control Input MFT				Position Feedback				Bulk Pack
			AC 24 V ± 20%, 50/60 Hz VDC ±10%	AC 24...240 V +10%/- 20%, 50/60 Hz DC 24...125 V ± 10%	AC 100...240 V ±10%	VA Rating	Wattage Running (Holding)	Motor Drive (Default)	NEMA 1, 2, or 4X	● = Heater Built-in NEMA Housing Y or H = OPTIONAL Heater	Rotary "M", Linear "L"	Select Mechanical Coupler	Select Electrical Connection	On/Off	Floating Point	2...10 V or 4...20 mA (w/500 Ω Resistor)	Honeywell Series 90, 0...135 Ω	BACnet: MS/TP or Modbus RTU (1) BACnet/IP or Modbus TCP (2)	0.5...20 V Phasecut	On/Off	Floating Point	Start and Span adj., Start 0.5...30 V Span 2.5...32 V	PWM adj., 0.02...50 Seconds	2...10 V (Default) Adjustable with MFT	Digital (1), Resistive Feedback	SPDT, 3A (0.5A Inductive) @ 250 V	Optional Accessories: Aux. Switch (S1A, S2A), Potentiometer (P..A GR)	Quantity of Actuators in Bulk Pack
LHB Series 34 lbf [150 N Force] 4" or 8" stroke		LHB24-3-100	●			3	1.5 (0.5)	150	2		L, 4"			●	●													
		LHB24-3-T-100	●			3	1.5 (0.5)	150	1		L, 4"			●	●													
		LHB24-3-200	●			3	1.5 (0.5)	300	2		L, 8"			●	●													
		LHB24-SR-100	●			3	1.5 (0.5)	150	2		L, 4"					●								●				
		LHB24-SR-200	●			3	1.5 (0.5)	300	2		L, 8"					●								●				
LHX Series 34 lbf [150 N Force] 4", 8", 12" stroke	Customizable*	LHX24-3-100	●			3	1.5 (0.5)	70...270 (150)	2		L, 4"		●	●	●													
		LHX24-3-200	●			3	1.5 (0.5)	140...540 (300)	2		L, 8"		●	●	●													
		LHX24-3-300	●			3	1.5 (0.5)	200...810 (450)	2		L, 12"		●	●	●													
		LHX120-3-100			●	2.5	1.5 (0.5)	70...270 (150)	2		L, 4"		●	●	●													
		LHX120-3-200			●	2.5	1.5 (0.5)	140...540 (300)	2		L, 8"		●	●	●													
		LHX120-3-300			●	2.5	1.5 (0.5)	200...810 (450)	2		L, 12"		●	●	●													
		LHX24-SR-100	●			3	1.5 (0.5)	70...270 (150)	2		L, 4"		●			●								●				
		LHX24-SR-200	●			3	1.5 (0.5)	140...540 (300)	2		L, 8"		●			●								●				
		LHX24-MFT-100	●			5	2.5 (1.2)	70...270 (150)	2		L, 4"		●							●	●	●	●	●				
		LHX24-MFT-200	●			5	2.5 (1.2)	140...540 (300)	2		L, 8"		●							●	●	●	●	●				
		LHX24-MFT-300	●			5	2.5 (1.2)	200...810 (450)	2		L, 12"		●							●	●	●	●	●				
LHQB(X) 22 lbf [100 N Force]		LHQB24-1-100	●			23	13 (1.5)	3.5	2		L, 4"			●														
		LHQB24-MFT-100	●			23	13 (1.5)	3.5	2		L, 4"									●		●		●				
	C*	LHQX24-MFT-100	●			23	13 (1.5)	3.5...15 (3.5)	2		L, 4"		●							●		●		●				
CMB Series 18 in-lb [2 Nm] Approx. 4.5 sq. ft.		CMB24-3	●			1.5	1.0 (0.2)	35	2		M			●	●													
		CMB24-3.1	●			1.5	1.0 (0.2)	35	2		M			●	●													20
		CMB120-3			●	3.5	1.5 (1.0)	35	2		M			●	●													
		CMB24-3-T	●			1.5	1.0 (0.2)	35	1		M			●	●													
		CMB24-3-T.1	●			1.5	1.0 (0.2)	35	1		M			●	●													20
		CMB24-SR-R	●			2.5	1.5 (0.5)	35	2		M					●								●				
		CMB24-SR-L	●			2.5	1.5 (0.5)	35	2		M					●								●				
		CHB24-3-T-100.1	●			1	0.5 (0.2)	380	1		L, 4"			●	●													20

See pages 1-6 through 1-9 of the Product Guide and Price List for additional generic product series specifications. Visit www.belimo.ca for detailed product specifications and downloadable data sheets.

*See pages 4-13 to 4-16 of the Product Guide and Price List for customization options.

X_10001 - 04/21 - Subject to change. © Belimo Aircontrols (USA), Inc.

NMV, LMV, LHV, CMB, CMBV Air Flow Measurement and Control Damper Actuator Product Range

5-year warranty

		Power Supply	Power Consumption		Running Time	Application			Operation and Servicing				Housing Type	Cabling	Drive Type		Control Input					Position Feedback		Sensor Integration (Select 1 of 3)		
		AC 24 V ± 20%, 50/60 Hz VDC ±10%	VA Rating	Wattage Running (Holding)	Motor Drive (Default)	CAV (0...3000 fpm)	VAV (0...3000 fpm)	Open Loop (0...3000 fpm)	NFC interface for Android	NFC for iPhone via Zip-BT-NFC*	PC-Tool	ZTH	NEMA 1 or 2	Conduit Connector Available**	Rotary "M", Linear "L"	Integrated Damper Blade	On/Off, Floating Point	2...10 V or 4...20 mA (w/500 Ω Resistor)	BACnet: MS/TP or Modbus RTU	MP Bus	2...10 V (Default) Adjustable with MFT	Optional Accessories: Aux. Switch (S1A, S2A), Potentiometer (P..A GR)	Passive (Pt1000, 10K-2, etc.)	Active (0...10 V) e.g. temperature, humidity, etc.	Contact Closure (switching capacity 16 mA @ 24 V), e.g. switches, occupancy switches
NMV Series 90 in-lb [10 Nm]	NMV-D3-MP	●	5	3 (1.5)	150	●	●	●	●	●	●	●	2		M			●		●	●	●	●	●	●
	NMV-D3-MOD	●	5	3 (1.5)	150	●	●	●			●	●	2		M			●	●	●	●	●		●	●
	NMV-D3-MFT	●	5	3 (1.5)	150	●	●	●			●	●	2	●	M			●		●	●	●	●	●	●
LMV Series 45 in-lb [5 Nm]	LMV-D3-MP	●	3.5	2 (1)	150	●	●	●	●	●	●	●	2		M			●		●	●	●	●	●	●
	LMV-D3-MOD	●	4	2 (1)	150	●	●	●			●	●	2		M			●	●	●	●	●		●	●
	LMV-D3-MFT	●	3.5	2 (1)	150	●	●	●			●	●	2	●	M			●		●	●	●	●	●	●
LHV Series 34 lbf [150 N]	LHV-D3-MP-100	●	4.5	2.5 (1.5)	150	●	●	●	●	●	●	●	2		L (4")			●		●	●	●	●	●	●
	LHV-D3-MP-200	●	4.5	2.5 (1.5)	150	●	●	●	●	●	●	●	2		L (8")			●		●	●	●	●	●	●
	LHV-D3-MP-300	●	4.5	2.5 (1.5)	150	●	●	●	●	●	●	●	2		L (12")			●		●	●	●	●	●	●
CMB Series 18 in-lb [2 Nm]	CMB24-L-100D	●	1	0.5 (0.2)	58						●	●	2		M	4"	●								
	CMB24-L-125D	●	1	0.5 (0.2)	58						●	●	2		M	5"	●								
	CMB24-L-150D	●	1	0.5 (0.2)	58						●	●	2		M	6"	●								
CMBV Series 18 in-lb [2 Nm]	CMBV-100-MFT	●	2.5	1.5 (1)	70	●	●	●			●	●	1		M	4"		●		●	●				
	CMBV-125-MFT	●	2.5	1.5 (1)	70	●	●	●			●	●	1		M	5"		●		●	●				
	CMBV-150-MFT	●	2.5	1.5 (1)	70	●	●	●			●	●	1		M	6"		●		●	●				

See page 1-14 of the Product Guide and Price List for additional generic product series specifications. Visit www.belimo.ca for detailed product specifications and downloadable data sheets.
*Zip-BT-NFC is not included in the purchase of this actuator. Please refer to page 4-1 of the Product Guide and Price List for more information.
**Conduit connector (TF-CC US) not included in the purchase of this actuator. Please refer to page 4-11 of the Product Guide and Price List for more information.

X_10001 - 04/21 - Subject to change. © Belimo Aircontrols (USA), Inc.

PKB, GKB(X), EFB Fail-Safe Damper Actuator Product Range

5-year warranty

			Power Supply				Power Consumption		Running Time		Housing Type		Drive Type	Custom Options		Control Input								Control Input MFT				Position Feedback			
			AC 24 V ± 20%, 50/60 Hz VDC ±10%	AC 24...240 V +10%/ - 20%, 50/60 Hz DC 24...125 V ± 10%	AC 120 V ±10%	AC 230 V ±10%	VA Rating (Actuator/Heater)	Wattage Running/Heater (Holding)	Motor Drive (Default)	Fail-Safe	NEMA 1, 2, or 4X	● = Heater Built-in NEMA Housing Y or H = OPTIONAL Heater**	Rotary "M", Linear "L"	Select Mechanical Coupler	Select Electrical Connection	On/Off	Floating Point	2...10 V or 4...20 mA (w/500 Ω Resistor)	Honeywell Series 90, 0...135 Ω	3k Ω (1), 10k Ω (2) NTC Thermistor	6...9 V, 20 V Output Voltage	BACnet: MS/TP or Modbus RTU (1) BACnet/IP or Modbus TCP (2)	0.5...20 V Phasecut	On/Off	Floating Point	Start and Span adj., Start 0.5...30 V (2.0) Span 2.5...32 V (8.0)	PWM adj., 0.02...50 Seconds	2...10 V (Default) Adjustable with MFT	Digital (1), Resistive Feedback	SPDT, 3A (0.5A Inductive) @ 250 V, (1 or 2)	Optional Accessories: Aux. Switch (S1A, S2A), Potentiometer (P..A GR)
PKB Series 1400 in-lb [160 Nm]		PKBUP-MFT-T		●			49	47 (4)	35	30	4X	●	M										1		●	●	●		●			
GKB Series 360 in-lb [40 Nm] Approx. 90 sq. ft.		GKB24-3	●				21	11 (3)	150	35	2		M			●	●														●
		GKB24-SR	●				21	11 (3)	150	35	2		M					●										●			●
		GKB24-IP	●				21	11 (3)	150	35	1		M										2					●	1		●
		GKB24-MFT	●				21	11 (3)	150	35	2		M												●	●	●		●			●
GKX Series 360 in-lb [40 Nm] Approx. 90 sq. ft.	Customizable*	GKX24-3	●				21	11 (3)	150	35	2		M	●	●	●	●[3]														●
		GKX24-3-T N4	●				21/21	11/21 (3)	150	35	4X	Y	M	●	●	●	●[3]														●
		GKX24-SR	●				21	11 (3)	150	35	2		M	●	●			●										●			●
		GKX24-SR-T N4	●				21/21	11/21 (3)	150	35	4X	Y	M	●	●			●										●			●
		GKX24-MFT	●				21	11 (3)	150	35	2		M	●	●										●	●	●		●			●
		GKX24-MFT-T N4	●				21/21	11/21 (3)	150	35	4X	Y	M	●	●										●	●	●		●			●
EFB Series 270 in-lb [30 Nm] Approx. 68 sq. ft.		EFB24	●				16	9.5 (4.5)	75	<20	2		M			●															
		EFB24 N4	●				16	9.5 (4.5)	75	<20	4		M			●															
		EFB24-S	●				16	9.5 (4.5)	75	<20	2		M			●														2	
		EFB120			●	●	21	9.5 (4.5)	75	<20	2		M			●															
		EFB120-S			●	●	21	9.5 (4.5)	75	<20	2		M			●														2	
		EFB120-S N4			●	●	21	9.5 (4.5)	75	<20	4		M			●														2	
		EFB24-SR	●				14	8.0 (4.5)	95	<20	2		M					●										●			
		EFB24-SR N4	●				14	8.0 (4.5)	95	<20	4		M					●										●			
		EFB24-SR-S	●				14	8.0 (4.5)	95	<20	2		M					●										●		2	
		EFB24-MFT	●				16	9.5 (4.5)	60...150 (150)	<20	2		M												●	●	●	●	●			
		EFB24-MFT-S	●				16	9.5 (4.5)	60...150 (150)	<20	2		M												●	●	●	●	●		2	

[3] AC 24 V only

See pages 2-7 and 2-8 of the Product Guide and Price List for additional generic product series specifications. Visit www.belimo.ca for detailed product specifications and downloadable data sheets.
*See pages 4-13 to 4-16 of the Product Guide and Price List for customization options.
**List Price does NOT include price for optional heater.

X_10001 - 04/21 - Subject to change. © Belimo Aircontrols (USA), Inc.

EFX and AFB Fail-Safe Damper Actuator Product Range

5-year warranty

			Power Supply				Power Consumption		Running Time		Housing Type		Drive Type	Custom Options		Control Input								Control Input MFT				Position Feedback			
			AC 24 V ± 20%, 50/60 Hz VDC ±10%	AC 24...240 V +10%/- 20%, 50/60 Hz	DC 24...125 V ± 10%	AC 120 V ±10%	AC 230 V ±10%	VA Rating (Actuator/Heater)	Wattage Running/Heater (Holding)	Motor Drive (Default)	Fail-Safe	NEMA 1, 2, or 4X	● = Heater Built-in NEMA Housing Y or H = OPTIONAL Heater	Rotary "M", Linear "L"	Select Mechanical Coupler	Select Electrical Connection	On/Off	Floating Point	2...10 V or 4...20 mA (w/500 Ω Resistor)	Honeywell Series 90, 0...135 Ω	3k Ω (1), 10k Ω (2) NTC Thermistor	6...9 V, 20 V Output Voltage	BACnet: MS/TP or Modbus RTU (1) BACnet/IP or Modbus TCP (2)	0.5...20 V Phasecut	On/Off	Floating Point	Start and Span adj., Start 0.5...30 V (2.0) Span 2.5...32 V (8.0)	PWM adj., 0.02...50 Seconds	2...10 V (Default) Adjustable with MFT	Digital (1), Resistive Feedback	SPDT, 3A (0.5A Inductive) @ 250 V, (1 or 2)	Optional Accessories: Aux. Switch (S1A, S2A), Potentiometer (P..A GR)
EFX Series 270 in-lb [30 Nm] Approx. 68 sq. ft.	Customizable*	EFX24	●					16	9.5 (4.5)	75	<20	2		M	●	●	●														
		EFX24-S	●					16	9.5 (4.5)	75	<20	2		M	●	●	●													2	
		EFX24-S N4	●					16	9.5 (4.5)	75	<20	4		M	●	●	●													2	
		EFX24-S N4H	●					16/21	9.5/21 (4.5)	75	<20	4	●	M	●	●	●													2	
		EFCX24-S N4	●					16	9.5 (4.5)	75	<10	4		M	●	●	●													2	
		EFX120			●	●		21	9.5 (4.5)	75	<20	2		M	●	●	●														
		EFX120-S			●	●		21	9.5 (4.5)	75	<20	2		M	●	●	●													2	
		EFX120-S N4			●	●		21	9.5 (4.5)	75	<20	4		M	●	●	●													2	
		EFX120-S N4H			●	●		21/22	9.5/22 (4.5)	75	<20	4	●	M	●	●	●													2	
		EFCX120-S N4			●	●		21	9.5 (4.5)	75	<10	4		M	●	●	●													2	
		EFX24-SR	●					14	8.0 (4.5)	95	<20	2		M	●	●			●										●		
		EFX24-SR-S	●					14	8.0 (4.5)	95	<20	2		M	●	●			●										●	2	
		EFX24-SR-S N4	●					14	8.0 (4.5)	95	<20	4		M	●	●			●										●	2	
		EFX24-SR-S N4H	●					14/21	8.0/21 (4.5)	95	<20	4	●	M	●	●			●										●	2	
		EFX120-SR N4			●	●		21	9.5 (4.5)	95	<20	4		M	●	●			●										●		
		EFX120-SR-S N4			●	●		21	9.5 (4.5)	95	<20	4		M	●	●			●										●	2	
		EFX24-MFT	●					16	9.5 (4.5)	60...150 (150)	<20	2		M	●	●									●	●	●	●	●		
		EFX24-MFT-S	●					16	9.5 (4.5)	60...150 (150)	<20	2		M	●	●									●	●	●	●	●	2	
		EFX24-MFT-S N4	●					16	9.5 (4.5)	60...150 (150)	<20	4		M	●	●									●	●	●	●	●	2	
		EFX24-MFT-S N4H	●					16/21	9.5/21 (4.5)	60...150 (150)	<20	4	●	M	●	●									●	●	●	●	●	2	
AFB Series 180 in-lb [20 Nm] Approx. 45 sq. ft.		AFB24	●					7.5	5 (2.5)	<75	<20	2		M			●														
		AFB24-S	●					7.5	5 (2.5)	<75	<20	2		M			●													2	
		AFBUP		●				8.5	7 (3.5)	<75	<20	2		M			●														
		AFBUP-S		●				8.5	7 (3.5)	<75	<20	2		M			●													2	
		AFB24-SR	●					8.5	5.5 (3)	95	<20	2		M					●										●		
		AFB24-SR-S	●					8.5	5.5 (3)	95	<20	2		M					●										●	2	
		AFB24-PC	●					10	7.5 (3)	150	<20	2		M										●					●		
		AFB24-IP	●					11	8.5 (5)	150	<20	1		M									2						●	1	
		AKB24-IP	●					21	13 (9)	150	35	1		M									2						●	1	
		SF24A-MOD	●					11	8.5 (3.5)	150	<20			M									1							1	
		AFB24-MFT	●					10	7.5 (3)	70...220 (150)	<20	2		M											●	●	●	●	●		
		AFB24-MFT-S	●					10	7.5 (3)	70...220 (150)	<20	2		M											●	●	●	●	●	2	
		AFB24-MFT95	●					10	7.5 (3)	70...220 (150)	<20	2		M						●									●		

See pages 2-7 and 2-8 of the Product Guide and Price List for additional generic product series specifications. Visit www.belimo.ca for detailed product specifications and downloadable data sheets.
*See pages 4-13 to 4-16 of the Product Guide and Price List for customization options.

X_10001 - 04/21 - Subject to change. © Belimo Aircontrols (USA), Inc.

AFX, AHKX, and NFB Fail-Safe Damper Actuator Product Range

5-year warranty

			Power Supply				Power Consumption		Running Time		Housing Type		Drive Type	Custom Options		Control Input								Control Input MFT				Position Feedback			
			AC 24 V ± 20%, 50/60 Hz VDC ±10%	AC 24...240 V +10%/- 20%, 50/60 Hz DC 24...125 V ± 10%	AC 120 V ±10%	AC 230 V ±10%	VA Rating (Actuator/Heater)	Wattage Running/Heater (Holding)	Motor Drive (Default)	Fail-Safe	NEMA 1, 2, or 4X	● = Heater Built-in NEMA Housing Y or H = OPTIONAL Heater**	Rotary "M", Linear "L"	Select Mechanical Coupler	Select Electrical Connection	On/Off	Floating Point	2...10 V or 4...20 mA (w/500 Ω Resistor)	Honeywell Series 90, 0...135 Ω	3k Ω (1), 10k Ω (2) NTC Thermistor	6...9 V, 20 V Output Voltage	BACnet: MS/TP or Modbus RTU (1) BACnet/IP or Modbus TCP (2)	0.5...20 V Phasecut	On/Off	Floating Point	Start and Span adj., Start 0.5...30 V (2.0) Span 2.5...32 V (8.0)	PWM adj., 0.02...50 Seconds	2...10 V (Default) Adjustable with MFT	Digital (1), Resistive Feedback	SPDT, 3A (0.5A Inductive) @ 250 V, (1 or 2)	Optional Accessories: Aux. Switch (S1A, S2A), Potentiometer (P..A GR)
AFX Series 180 in-lb [20 Nm] Approx. 45 sq.ft.	Customizable*	AFX24	●				7.5	5 (2.5)	<75	<20	2		M	●	●	●																
		AFX24 N4	●				7.5	5 (2.5)	<75	<20	4X	H	M	●	●	●																
		AFX24-S	●				7.5	5 (2.5)	<75	<20	2		M	●	●	●														2	
		AFX24-S N4	●				7.5	5 (2.5)	<75	<20	4X	H	M	●	●	●														2	
		AFXUP		●			8.5	7 (3.5)	<75	<20	2		M	●	●	●															
		AFXUP N4		●			8.5	7 (3.5)	<75	<20	4X	H	M	●	●	●															
		AFXUP-S		●			8.5	7 (3.5)	<75	<20	2		M	●	●	●														2	
		AFXUP-S N4		●			8.5	7 (3.5)	<75	<20	4X	H	M	●	●	●														2	
		AFX24-SR	●				8.5	5.5 (3)	95	<20	2		M	●	●			●										●			
		AFX24-SR N4	●				8.5	5.5 (3)	95	<20	4X	H	M	●	●			●										●			
		AFX24-SR-S	●				8.5	5.5 (3)	95	<20	2		M	●	●			●										●		2	
		AFX24-SR-S N4	●				8.5	5.5 (3)	95	<20	4X	H	M	●	●			●										●		2	
		AFX24-MFT	●				10	7.5 (3)	70...220 (150)	<20	2		M	●	●									●	●	●	●	●			
		AFX24-MFT N4	●				10	7.5 (3)	70...220 (150)	<20	4X	H	M	●	●									●	●	●	●	●			
		AFX24-MFT-S	●				10	7.5 (3)	70...220 (150)	<20	2		M	●	●									●	●	●	●	●		2	
		AFX24-MFT-S N4	●				10	7.5 (3)	70...220 (150)	<20	4X	H	M	●	●									●	●	●	●	●		2	
		AFX24-MFT95	●				10	7.5 (3)	70...220 (150)	<20	2		M	●	●				●									●			
		AFX24-MFT95 N4	●				10	7.5 (3)	70...220 (150)	<20	4X	H	M	●	●				●									●			
AHKX Series 100 lbf [450 N]	C*	AHKX24-MFT-100	●				22	11 (3)	90...150 (150)	35	2		L, 4"		●									●	●	●	●	●			
NFB Series 90 in-lb [10 Nm] Approx. 22 sq.ft.		NFB24	●				8.5	6 (2.5)	<75	<20	2		M			●															
		NFB24-S	●				8.5	6 (2.5)	<75	<20	2		M			●														2	
		NFBUP		●			6.5	6 (2.5)	<75	<20	2		M			●															
		NFBUP-S		●			6.5	6 (2.5)	<75	<20	2		M			●														2	
		NFB24-SR	●				6	3.5 (2.5)	95	<20	2		M					●										●			
		NFB24-SR-S	●				6	3.5 (2.5)	95	<20	2		M					●										●		2	
		NFB24-MFT	●				9	6.5 (3)	40...150 (150)	<20	2		M											●	●	●	●	●			
		NFB24-MFT-S	●				9	6.5 (3)	40...150 (150)	<20	2		M											●	●	●	●	●		2	

See pages 2-7 and 2-8 of the Product Guide and Price List for additional generic product series specifications. Visit www.belimo.ca for detailed product specifications and downloadable data sheets.

*See pages 4-13 to 4-16 of the Product Guide and Price List for customization options.

**List Price does NOT include price for optional heater.

X_10001 - 04/21 - Subject to change. © Belimo Aircontrols (USA), Inc.

NFX and NKQB(X) Fail-Safe Damper Actuator Product Range

5-year warranty

			Power Supply				Power Consumption		Running Time		Housing Type		Drive Type	Custom Options		Control Input								Control Input MFT				Position Feedback			
			AC 24 V ± 20%, 50/60 Hz VDC ±10%	AC 24...240 V +10%/- 20%, 50/60 Hz DC 24...125 V ± 10%	AC 120 V ±10%	AC 230 V ±10%	VA Rating (Actuator/Heater)	Wattage Running/Heater (Holding)	Motor Drive (Default)	Fail-Safe	NEMA 1, 2, or 4X	● = Heater Built-in NEMA Housing Y or H = OPTIONAL Heater**	Rotary "M", Linear "L"	Select Mechanical Coupler	Select Electrical Connection	On/Off	Floating Point	2...10 V or 4...20 mA (w/500 Ω Resistor)	Honeywell Series 90, 0...135 Ω	3k Ω (1), 10k Ω (2) NTC Thermistor	6...9 V, 20 V Output Voltage	BACnet: MS/TP or Modbus RTU (1) BACnet/IP or Modbus TCP (2)	0.5...20 V Phasecut	On/Off	Floating Point	Start and Span adj., Start 0.5...30 V (2.0) Span 2.5...32 V (8.0)	PWM adj., 0.02...50 Seconds	2...10 V (Default) Adjustable with MFT	Digital (1), Resistive Feedback	SPDT, 3A (0.5A Inductive) @ 250 V, (1 or 2)	Optional Accessories: Aux. Switch (S1A, S2A), Potentiometer (P..A GR)
NFX Series 90 in-lb [10 Nm] Approx. 22 sq.ft.	Customizable*	NFX24	●				8.5	6 (2.5)	<75	<20	2		M	●	●	●															
		NFX24 N4	●				8.5	6 (2.5)	<75	<20	4X	H	M	●	●	●															
		NFX24-S	●				8.5	6 (2.5)	<75	<20	2		M	●	●	●														2	
		NFX24-S N4	●				8.5	6 (2.5)	<75	<20	4X	H	M	●	●	●														2	
		NFXUP		●			6.5	6 (2.5)	<75	<20	2		M	●	●	●															
		NFXUP N4		●			6.5	6 (2.5)	<75	<20	4X	H	M	●	●	●															
		NFXUP-S		●			6.5	6 (2.5)	<75	<20	2		M	●	●	●														2	
		NFXUP-S N4		●			6.5	6 (2.5)	<75	<20	4X	H	M	●	●	●														2	
		NFX24-SR	●				6	3.5 (2.5)	95	<20	2		M	●	●			●										●			
		NFX24-SR N4	●				6	3.5 (2.5)	95	<20	4X	H	M	●	●			●										●			
		NFX24-SR-S	●				6	3.5 (2.5)	95	<20	2		M	●	●			●										●		2	
		NFX24-SR-S N4	●				6	3.5 (2.5)	95	<20	4X	H	M	●	●			●										●		2	
		NFX24-MFT	●				9	6.5 (3)	40...150 (150)	<20	2		M	●	●									●	●	●	●	●			
		NFX24-MFT N4	●				9	6.5 (3)	40...150 (150)	<20	4X	H	M	●	●									●	●	●	●	●			
		NFX24-MFT-S	●				9	6.5 (3)	40...150 (150)	<20	2		M	●	●									●	●	●	●	●		2	
		NFX24-MFT-S N4	●				9	6.5 (3)	40...150 (150)	<20	4X	H	M	●	●									●	●	●	●	●		2	
NKQB Series 54 in-lb [6 Nm] Approx. 12 sq.ft.		NKQB24-1	●				22	11 (3)	4	4	2		M			●															●
		NKQB24-SR	●				22	11 (3)	4	4	2		M					●										●			●
NKQX Series 54 in-lb [6 Nm]	Customizable*	NKQX24-1	●				22	11 (3)	4,7,10 (4)	4	2		M	●	●	●															●
		NKQX24-SR	●				22	11 (3)	4,7,10 (4)	4	2		M	●	●			●										●			●
		NKQX24-MFT	●				22	11 (3)	4,7,10 (4)	4	2		M	●	●									●	●	●	●	●			●

See pages 2-7 and 2-8 of the Product Guide and Price List for additional generic product series specifications. Visit www.belimo.ca for detailed product specifications and downloadable data sheets.

*See pages 4-13 to 4-16 of the Product Guide and Price List for customization options.

**List Price does NOT include price for optional heater.

X_10001 - 04/21 - Subject to change. © Belimo Aircontrols (USA), Inc.

LF Fail-Safe Damper Actuator Product Range

5-year warranty

		Power Supply				Power Consumption		Running Time		Housing Type		Drive Type	Custom Options		Control Input							Control Input MFT				Position Feedback			
		AC 24 V ± 20%, 50/60 Hz VDC ±10%	AC 24...240 V +10%/- 20%, 50/60 Hz DC 24...125 V ± 10%	AC 120 V ±10%	AC 230 V ±10%	VA Rating (Actuator/Heater)	Wattage Running/Heater (Holding)	Motor Drive (Default)	Fail-Safe	NEMA 1, 2, or 4X	● = Heater Built-in NEMA Housing Y or H = OPTIONAL Heater	Rotary "M", Linear "L"	Select Mechanical Coupler	Select Electrical Connection	On/Off	Floating Point	2...10 V or 4...20 mA (w/500 Ω Resistor)	Honeywell Series 90, 0...135 Ω	3k Ω (1), 10k Ω (2) NTC Thermistor	6...9 V, 20 V Output Voltage	BACnet: MS/TP or Modbus RTU (1) BACnet/IP or Modbus TCP (2)	0.5...20 V Phasecut	On/Off	Floating Point	Start and Span adj., Start 0.5...30 V (2.0) Span 2.5...32 V (8.0)	PWM adj., 0.02...50 Seconds	2...10 V (Default) Adjustable with MFT	Digital (1), Resistive Feedback	SPDT, 3A (0.5A Inductive) @ 250 V, (1 or 2)	Optional Accessories: Aux. Switch (S1A, S2A), Potentiometer (P..A GR)
LF Series 35 in-lb [4 Nm] Approx. 8.5 sq.ft.	LF24 US	●				7	5 (2.5)	<40...75	<25	2		M			●														
	LF24-S US	●				7	5 (2.5)	<40...75	<25	2		M			●													1	
	LF120 US			●		7.5	5.5 (3.5)	<40...75	<25	2		M			●														
	LF120-S US			●		7.5	5.5 (3.5)	<40...75	<25	2		M			●													1	
	LF230 US				●	7	5 (3)	<40...75	<25	2		M			●														
	LF230-S US				●	7	5 (3)	<40...75	<25	2		M			●													1	
	LF24-SR US	●				5	2.5 (1)	150	<25	2		M					●										●		
	LF24-SR-S US	●				5	2.5 (1)	150	<25	2		M					●										●		1
	LF24-SR-E US	●				5	2.5 (1)	150	<25	2		M					●										●		
	LF24-3 US	●				5	2.5 (1)	150	<25	2		M			●	●													
	LF24-3-S US	●				5	2.5 (1)	150	<25	2		M			●	●													1
	LF24-ECON-R03 US	●				5	2.5 (1)	95	<25	2		M							1								●		
	LF24-ECON-R10 US	●				5	2.5 (1)	95	<25	2		M							2								●		
	LF24-MFT US	●				5	2.5 (1)	75...300 (150)	<25	2		M											●	●	●	●	●		
	LF24-MFT-S US	●				5	2.5 (1)	75...300 (150)	<25	2		M											●	●	●	●	●		1
	LF24-MFT-20 US	●				6	3.5 (1.5)	150	<25	2		M								●			●	●	●	●	●		
	LF24-MFT-S-20 US	●				6	3.5 (1.5)	150	<25	2		M								●			●	●	●	●	●		1
	LFC24-3-R US	●				5	2.5 (1)	90	<25	2		M				●													
	LFC24-3-S US	●				5	2.5 (1)	90	<25	2		M				●													1

See pages 2-7 and 2-8 of the Product Guide and Price List for additional generic product series specifications. Visit www.belimo.ca for detailed product specifications and downloadable data sheets.

X_10001 - 04/21 - Subject to change. © Belimo Aircontrols (USA), Inc.

TFB(X) Fail-Safe Damper Actuator Product Range

5-year warranty

			Power Supply				Power Consumption		Running Time		Housing Type		Drive Type	Custom Options		Control Input								Control Input MFT				Position Feedback			
			AC 24 V ± 20%, 50/60 Hz VDC ±10%	AC 24...240 V +10%/- 20%, 50/60 Hz DC 24...125 V ± 10%	AC 120 V ±10%	AC 230 V ±10%	VA Rating (Actuator/Heater)	Wattage Running/Heater (Holding)	Motor Drive (Default)	Fail-Safe	NEMA 1, 2, or 4X	● = Heater Built-in NEMA Housing Y or H = OPTIONAL Heater	Rotary "M", Linear "L"	Select Mechanical Coupler	Select Electrical Connection	On/Off	Floating Point	2...10 V or 4...20 mA (w/500 Ω Resistor)	Honeywell Series 90, 0...135 Ω	3k Ω (1), 10k Ω (2) NTC Thermistor	6...9 V, 20 V Output Voltage	BACnet: MS/TP or Modbus RTU (1) BACnet/IP or Modbus TCP (2)	0.5...20 V Phasecut	On/Off	Floating Point	Start and Span adj., Start 0.5...30 V (2.0) Span 2.5...32 V (8.0)	PWM adj., 0.02...50 Seconds	2...10 V (Default) Adjustable with MFT	Digital (1), Resistive Feedback	SPDT, 3A (0.5A Inductive) @ 250 V, (1 or 2)	Optional Accessories: Aux. Switch (S1A, S2A), Potentiometer (P..A GR)
TFB Series 22 in-lb [2 Nm] Approx. 5.5 sq.ft.		TFB24	●				5	2.5 (1.5)	<75	<25	2		M			●															
		TFB24-S	●				5	2.5 (1.5)	<75	<25	2		M			●														1	
		TFLB24	●				5	2.5 (1.5)	<75	<75	2		M			●															
		TFB120			●	●	5	2.5 (1.3)	<75	<25	2		M			●															
		TFB120-S			●	●	5	2.5 (1.3)	<75	<25	2		M			●														1	
		TFLB120			●	●	5	2.5 (1.3)	<75	<75	2		M			●															
		TFCB120-S			●	●	6	3 (1.5)	<30	<25	2		M			●														1	
		TFB24-SR	●				4	2.5 (1)	95	<25	2		M					●										●			
		TFB24-SR-S	●				4	2.5 (1)	95	<25	2		M					●										●		1	
		TFB120-SR			●	●	5.5	2.5 (2)	95	<25	2		M					●										●			
		TFB24-3	●				4	2.5 (1)	95	<25	2		M			●	●														
		TFB24-3-S	●				4	2.5 (1)	95	<25	2		M			●	●													1	
		TFB24-MFT	●				4	2.5 (1)	75...300 (150)	<25	2		M											●	●	●	●	●			
		TFB24-MFT-S	●				4	2.5 (1)	75...300 (150)	<25	2		M											●	●	●	●	●		1	
TFX Series 22 in-lb [2 Nm] Approx. 5.5 sq.ft.	Customizable*	TFX24	●				5	2.5 (1.5)	<75	<25	2		M	●	●	●															
		TFX24-S	●				5	2.5 (1.5)	<75	<25	2		M	●	●	●														1	
		TFX120			●	●	5	2.5 (1.3)	<75	<25	2		M	●	●	●															
		TFX120-S			●	●	5	2.5 (1.3)	<75	<25	2		M	●	●	●														1	
		TFCX120-S			●	●	6	3 (1.5)	<30	<25	2		M	●	●	●														1	
		TFX24-SR	●				4	2.5 (1)	95	<25	2		M	●	●			●										●			
		TFX24-SR-S	●				4	2.5 (1)	95	<25	2		M	●	●			●										●		1	
		TFX24-3	●				4	2.5 (1)	95	<25	2		M	●	●	●	●														
		TFX24-3-S	●				4	2.5 (1)	95	<25	2		M	●	●	●	●													1	
		TFX24-MFT	●				4	2.5 (1)	75...300 (150)	<25	2		M	●	●									●	●	●	●	●			
		TFX24-MFT-S	●				4	2.5 (1)	75...300 (150)	<25	2		M	●	●									●	●	●	●	●		1	

See pages 2-7 and 2-8 of the Product Guide and Price List for additional generic product series specifications. Visit www.belimo.ca for detailed product specifications and downloadable data sheets.

*See pages 4-13 to 4-16 of the Product Guide and Price List for customization options.

X_10001 - 04/21 - Subject to change. © Belimo Aircontrols (USA), Inc.

FSAF*A, FSAFB, FSNF, FSLF, FSTF Fire and Smoke Fail-Safe Damper Actuator Product Range

5-year warranty

		Power Supply			Power Consumption		Running Time		Control Input	Auxiliary Switches	
		AC/DC 24 V	AC 120 V	AC 230 V	VA Rating	Wattage Running (Holding)	Motor Drive	Fail-Safe	On/Off	2 SPST	2 SPDT
FSAF*A Series 180 in-lb [20 Nm] Approx. 18 sq. ft. @ 350°F	FSAF24A	●			32	23 (5)	<25	<15	●		
	FSAF24A-S	●			32	23 (5)	<25	<15	●	●	
	FSAF120A		●		30	24 (7.5)	<25	<15	●		
	FSAF120A-S		●		30	24 (7.5)	<25	<15	●	●	
	FSAF230A			●	37	29 (10)	<25	<15	●		
	FSAF230A-S			●	37	29 (10)	<25	<15	●	●	
FSAFB Series 180 in-lb [20 Nm] Approx. 18 sq. ft. @ 250°F	FSAFB24-SR	●			9.5	6 (3)	<75	<20	2...10 V		
	FSAFB24-SR-S	●			9.5	6 (3)	<75	<20	2...10 V		●
FSNF Series 70 in-lb [8 Nm] Approx. 12 sq. ft. @ 350°F	FSNF24 US	●			27	18 (3)	<15	<15	●		
	FSNF24-S US	●			27	18 (3)	<15	<15	●		●
	FSNF120 US		●		27	22 (6)	<15	<15	●		
	FSNF120-S US		●		27	22 (6)	<15	<15	●		●
	FSNF230 US			●	27	22 (5)	<15	<15	●		
	FSNF230-S US			●	27	22 (5)	<15	<15	●		●
FSLF Series 30 in-lb [3.5 Nm] Approx. 4 sq. ft. @ 350°F	FSLF24 US	●			15	12 (2.5)	<15	<15	●		
	FSLF24-S US	●			15	12 (2.5)	<15	<15	●	●	
	FSLF120 US		●		18	15 (4)	<15	<15	●		
	FSLF120-S US		●		18	15 (4)	<15	<15	●	●	
	FSLF230 US			●	17	15 (4)	<15	<15	●		
	FSLF230-S US			●	17	15 (4)	<15	<15	●	●	
FSTF Series* 18 in-lb [2 Nm] Approx. 1.5 sq. ft. @ 250°F	FSTF24 US	●			3	2 (1.5)	<75	<25	●		
	FSTF24-S US	●			3	2 (1.5)	<75	<25	●	●	
	FSTF120 US		●		3.5	2 (1.5)	<75	<25	●		
	FSTF120-S US		●		3.5	2 (1.5)	<75	<25	●	●	
	FSTF230 US			●	4.5	2.5 (2)	<75	<25	●		
	FSTF230-S US			●	4.5	2.5 (2)	<75	<25	●	●	

VA Rating Note:

The FSAF*A, FSNF, and FSLF series actuators draw more current when driving against any stops. Neither UL nor Belimo requires any local fusing or breakers. If used, see individual data sheets for End Stop current draws and current limit values.

*See retrofit installation instructions for details.

Use FSTF actuators only for dampers less than 1.5 sq.ft. at 250°F.

Use FSLF for dampers 4 sq.ft. and less at 350°F. No linkages are currently available.

Use FSNF for dampers 4...12 sq.ft. at 350°F and use FSAF*A for larger dampers and multisection applications. Linkages are available for FSAF*A & FSAFB, FSNF, and FSTF.

X_10001 - 04/21 - Subject to change. © Belimo Aircontrols (USA), Inc.

ZIP Economizer Product Range

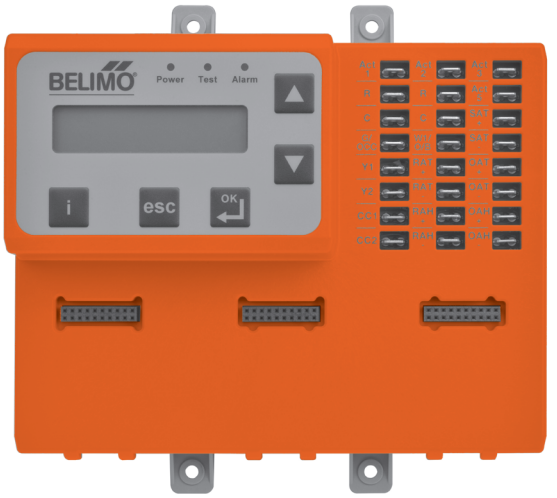

ECON-ZIP-BASE

5

5-year warranty

Specifications

Power Supply	AC 24 V ±20%, 50/60 Hz, Class 2 power
Power Consumption*	4 VA base control (ECON-ZIP-BASE) 5.5 VA base control with Energy Module (ECON-ZIP-BASE + ECON-ZIP-EM) 5 VA base control with Communication Module (ECON-ZIP-BASE + ECON-ZIP-COM) 6.5 VA base control with Energy Module and Communication Module
Supported Temperature Sensor	NTC 10K-2 thermistor sensor auto-detection
Supported Humidity Sensor	0...10 V; sensor auto-detection
Supported CO_2 Sensor	0...10 V; sensor auto-detection
Environmental	RoHS, conformally coated
Ambient Temperature	-40...+158°F [-40...+70°C]
Storage Temperature	-40...+176°F [-40...+80°C]
Humidity	5...95% R.H. (non-condensing)
Wiring	¼" male spade connectors
Housing Material	UL94-5VA
Housing	NEMA 1
Display	2x16 character LCD; LED backlight
Display Operating Temperature**	-22...+176°F [-30...+80°C]
Agency Listings	EMC according to UL60730-1, cULus according to UL873, CAN/CSA C22.2, No. 24-93, IECC
Energy Code Compliant	ASHRAE 90.1, CA Title 24, NECB, IECC

*The power consumption is for the control only and does not include connected loads such as actuator, compressors, fans, and sensors.
**At low temperatures the display has decreased response time. Below -22°F [-30°C] it will not function.

FAIL-SAFE ACTUATORS***

Model #	Torque	Control Input	Feedback	Power Supply	Running Time(s)		VA Rating
					Ⓜ		
AFB24-SR	180 in-lb [20 Nm]	2...10 V	2...10 V	AC/DC 24 V	95 seconds	<20 seconds	8.5
NFB24-SR	90 in-lb [10 Nm]	2...10 V	2...10 V	AC/DC 24 V	95 seconds	<20 seconds	6
LF24-SR US	35 in-lb [4 Nm]	2...10 V	2...10 V	AC/DC 24 V	150 seconds	<25 seconds	5
TFB24-SR	22 in-lb [2.5 Nm]	2...10 V	2...10 V	AC/DC 24 V	95 seconds	<25 seconds	4

*** Up to three actuators can be wired in parallel. Visit www.belimo.ca for details.
Belimo fail-safe actuators must be used to facilitate faster commissioning procedures (-SR required).

SENSORS

	Temperature	ECON-ZIP-10K	The ECON-ZIP-10K allows for reliable air temperature readings. The sensor may be used for outdoor air (OAT), return air (RAT), or supply air (SAT) temperature measurements and control, with no configuration required. A minimum of one SAT and one OAT sensor is required for the ZIP Economizer to function. An RAT sensor can be added for differential temperature change over strategy. For best control results, sensors should be placed in the air stream. The T-Bracket mounting is universal and can be inserted through the ductwork, fan housing or surface mounted.
	Carbon Dioxide (CO_2) Sensor	22DC-51	The 22DC-51 Carbon Dioxide (CO_2) air quality sensor may be incorporated to further increase energy savings and occupant comfort through Demand Control Ventilation (DCV). By directly measuring CO_2 concentration levels in the served space the outside air damper position will modulate to accommodate for changes in space occupancy (CO_2). ECON-ZIP-EM required for Demand Control Ventilation functionality.
	Temperature/ Humidity	ECON-ZIP-TH	The ECON-ZIP-TH Sensor may be used to measure temperature and humidity in the outdoor or return air stream. The temperature and humidity output is via 2 discrete analog channels that can be independently measured with a multimeter. One sensor is used in the outdoor air intake for single enthalpy changeover strategy. An additional sensor can be added in the return air stream for differential enthalpy changeover strategy. Note: When using the ECON-ZIP-TH it is not necessary to use a separate temperature sensor ECON-ZIP-10K for outdoor air (OAT), return air (RAT).

MODULES

	Energy	ECON-ZIP-EM	The ZIP Economizer Energy Module provides additional I/Os to offer higher control functionalities that will save even more energy. The Energy Module is needed for demand control ventilation, indoor fan- 2 speed control or remote diagnostic alarm notification, power exhaust fan, remote override for damper positioning, and preoccupancy purge. The auto-detection and plug and play capability offers quick set up.
	Communication	ECON-ZIP-COM	The ZIP Economizer Communication Module provides remote diagnostic alarm indication with future capabilities such as data trending and building automation integration. Required for BACnet MS/TP communication.

X_10001 - 04/21 - Subject to change. © Belimo Aircontrols (USA), Inc.

Energy Valve (EV)
Product Range

		Valve Nominal Size		Type	Suitable Actuators	
	GPM Range	Inches	DN [mm]	2-way	Non Fail-Safe	Electronic Fail-Safe
NPT	1.65...5.5*	½	15	EV050S-055	LRB(X)24-EV	AKRB(X)24-EV
NPT	3.1...10.3*	¾	20	EV075S-103	LRB(X)24-EV	AKRB(X)24-EV
NPT	5.5...18.2*	1	25	EV100S-182	LRB(X)24-EV	AKRB(X)24-EV
NPT	8.6...28.5*	1¼	32	EV125S-285	NRB(X)24-EV	AKRB(X)24-EV
NPT	11.9...39.6*	1½	40	EV150S-396	NRB(X)24-EV	AKRB(X)24-EV
NPT	22.8...76.1*	2	50	EV200S-761	ARB(X)24-EV	AKRB(X)24-EV
NPT	30...100*	2	50	EV200S-1000**	ARB(X)24-EV	AKRB(X)24-EV
Flanged ANSI 125	38...127*	2½	65	EV250SU-127	ARB(X)24-EV	AKRB(X)24-EV
Flanged ANSI 125	54...180*	3	80	EV300SU-180	ARB(X)24-EV	AKRB(X)24-EV
Flanged ANSI 125	95...317*	4	100	EV400SU-317	GRB(X)24-EV	GKRB(X)24-EV
Flanged ANSI 125	149...495*	5	125	EV500SU-495	GRB(X)24-EV	GKRB(X)24-EV
Flanged ANSI 125	214...713*	6	150	EV600SU-713	GRB(X)24-EV	GKRB(X)24-EV
Flanged ANSI 250	38...127*	2½	65	EV250SU-127-250	ARB(X)24-EV	AKRB(X)24-EV
Flanged ANSI 250	54...180*	3	80	EV300SU-180-250	ARB(X)24-EV	AKRB(X)24-EV
Flanged ANSI 250	95...317*	4	100	EV400SU-317-250	GRB(X)24-EV	GKRB(X)24-EV
Flanged ANSI 250	149...495*	5	125	EV500SU-495-250	GRB(X)24-EV	GKRB(X)24-EV
Flanged ANSI 250	214...713*	6	150	EV600SU-713-250	GRB(X)24-EV	GKRB(X)24-EV

*V'nom = Maximum flow for each valve body size.
** Fluid temperature range is 39...250°F [4...120°C]

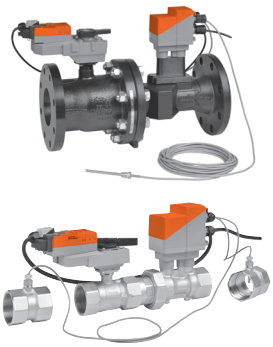

5 — 5-year warranty

7 — 7-year warranty with cloud connectivity

Mode of Operation

The Energy Valve is an energy metering pressure independent control valve that optimizes, documents, and proves water coil performance.

Product Features

Measures Energy: using its built-in electronic flow sensor and supply and return temperature sensors.
Controls Power: with its Power Control logic, providing linear heat transfer regardless of temperature and pressure variations.
Manages Delta T: by solving Low Delta T Syndrome. In addition, it reduces pumping costs while increasing chiller/boiler efficiency by optimizing coil efficiency.

Actuator Specifications

Control type	modulating
Manual override	LR, NR, AR, GR, AKR, GKR
Electrical connection	3 ft. [1 m] cable with ½" conduit fitting

Valve Specifications

Fluid	chilled or hot water, 60% glycol max
Sizes	½", ¾", 1", 1¼", 1½", 2", 2½", 3", 4", 5", 6"
End fitting	NPT female (½...2") pattern to mate with ANSI 125 or 250 flange (2½...6")
Materials	
Body	
Valve	forged brass, nickel plated (½...2") cast iron - GG25 (2½...6")
Sensor housing	forged brass, nickel plated (½...2") ductile iron - GGG50 (2½...6")
Ball	stainless steel
Stem	stainless steel
Characterizing disc	Tefzel® (½...2") stainless steel (2½...6")
Fluid temp range	14...250°F [-10...+120°C], 39...250°F [4...120°C] (EV200SU-1000)
Body pressure rating	360 psi (½...2"), ANSI 125, Class B (2½...6") ANSI 250 (2½...6")
Close-off pressure	200 psid (½...2"), 175 psid (ANSI 125, 2½...6"), 310 psid (ANSI 250, 2 ½"...6")
Differential pressure range (ΔP)	see technical documentation
Leakage	0%
Communication	BACnet IP, BACnet MS/TP, listed by BTL, web server, Modbus RTU/IP, Belimo MP-Bus, analog
Remote temperature sensor length	
½...2"	2 ft. 7.5 in. [0.8 m] short, 9.8 ft. [3 m] long
2½...6"	32.8 ft. [10 m]

X_10001 - 04/21 - Subject to change. © Belimo Aircontrols (USA), Inc.

Electronic Pressure Independent Control Valve (ePIV) Product Range

		Valve Nominal Size		Type	Suitable Actuators	
	GPM	Inches	DN [mm]	2-way	Non Fail-Safe	Electronic Fail-Safe
NPT	5.5*	½	15	P2050SU-055	LRX24-EP2(-MOD)	AKRX24-EP2
NPT	10.3*	¾	20	P2075SU-103	LRX24-EP2(-MOD)	AKRX24-EP2
NPT	18.2*	1	25	P2100SU-182	LRX24-EP2(-MOD)	AKRX24-EP2
NPT	28.5*	1¼	32	P2125SU-285	NRX24-EP2 (-MOD)	AKRX24-EP2
NPT	39.6*	1½	40	P2150SU-396	NRX24-EP2 (-MOD)	AKRX24-EP2
NPT	76.1*	2	50	P2200SU-761	ARX24-EP2 (-MOD)	AKRX24-EP2
NPT	100*	2	50	P2200SU-1000**	ARX24-EP2 (-MOD)	AKRX24-EP2
Flanged ANSI 125	127*	2½	65	P6250SU-127	ARX24-EP2 (-MOD)	AKRX24-EP2
Flanged ANSI 125	180*	3	80	P6300SU-180	ARX24-EP2 (-MOD)	AKRX24-EP2
Flanged ANSI 125	317*	4	100	P6400SU-317	GRX24-EP2 (-MOD)	GKRX24-EP2
Flanged ANSI 125	495*	5	125	P6500SU-495	GRX24-EP2 (-MOD)	GKRX24-EP2
Flanged ANSI 125	713*	6	150	P6600SU-713	GRX24-EP2 (-MOD)	GKRX24-EP2
Flanged ANSI 250	127*	2½	65	P6250SU-127-250	ARX24-EP2 (-MOD)	AKRX24-EP2
Flanged ANSI 250	180*	3	80	P6300SU-180-250	ARX24-EP2 (-MOD)	AKRX24-EP2
Flanged ANSI 250	317*	4	100	P6400SU-317-250	GRX24-EP2(-MOD)	GKRX24-EP2
Flanged ANSI 250	495*	5	125	P6500SU-495-250	GRX24-EP2(-MOD)	GKRX24-EP2
Flanged ANSI 250	713*	6	150	P6600SU-713-250	GRX24-EP2(-MOD)	GKRX24-EP2

*V'nom = Maximum flow for each valve body size.
** Fluid temperature range is 39...250°F [4...120°C].
Note: For all models, flows can be field set to 30% of nominal flow rate.

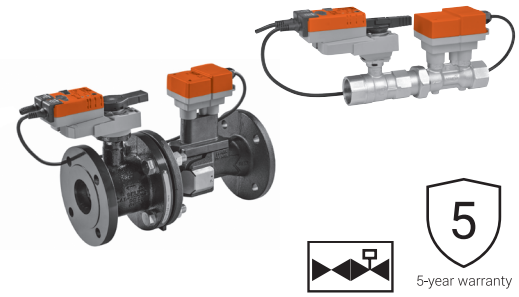

Mode of Operation

The 2-way ePIV is a pressure independent characterized control valve with an integrated electronic flow meter and a powerful control algorithm. The ePIV control signal maintains the flow setpoint regardless of system pressure variations and modulates the valve based on its measured true flow.

Product Features

Provides constant flow regardless of pressure variations in the system. Simplified valve sizing and selection, no Cv calculations required.

Actuator Specifications

Control type	modulating
Power supply	AC/DC 24 V
Manual override	LR, NR, AR, GR, AKR, GKR
Electrical connection	3 ft. [1 m] cable with ½" conduit fitting
Communication	analog and Belimo MP-Bus BACnet MS/TP, Modbus RTU (-MOD actuators)

Valve Specifications

Fluid	chilled or hot water, up to 60% glycol
Sizes	½", ¾", 1", 1¼", 1½", 2", 2½", 3", 4", 5", 6"
End fitting	NPT female (½...2") pattern to mate with ANSI 125 or 250 flange (2½...6")
Materials	
Body	
Valve	brass, nickel plated (½...2") cast iron-GG25 (2½...6")
Flow sensor	forged brass, nickel plated (½...2") ductile iron- GGG50 (2½...6")
Ball	stainless steel
Stem	stainless steel
Characterizing disc	Tefzel® (½...2") stainless steel (2½...6")
Fluid temp range	14...250°F [-10...+120°C], 39...250°F [4...120°C] (P2200SU-1000)
Body pressure rating	360 psi (½...2") ANSI 125, Class B (2½...6") ANSI 250 (2½...6") (-250)
Close-off pressure	200 psid (½...2") 175 psid (2½...6") 310 psid (2½...6") (-250)
Differential pressure range (ΔP)	see technical documentation
Leakage	0%
Rangeability	100:1
Flow control tolerance	±5%
Flow measurement tolerance	±2%

All flow tolerances @ 68...77°F [20...25°C] and 0% glycol.

X_10001 - 04/21 - Subject to change. © Belimo Aircontrols (USA), Inc.

6-Way Electronic Pressure Independent Control Valve (ePIV) Product Range

Flow	Valve Nominal Size		Type	Suitable Actuators
Vnom/GPM	Inches	DN [mm]	ePI 6-way	Non Fail-Safe
5.5	½	15	P3050B6-K	LRX24-LP-EP6
5.5	½	15	P3050B6-KS	
10.3	¾	20	P3075B6-J	
10.3	¾	20	P3075B6-JS	

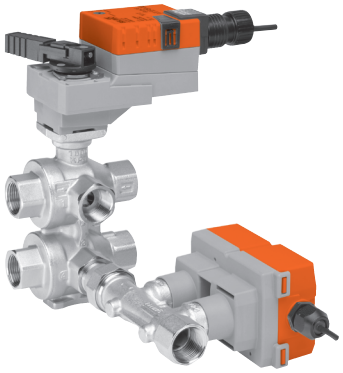

5-year warranty

Linear Characteristic

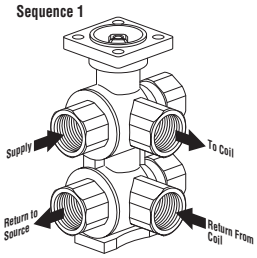

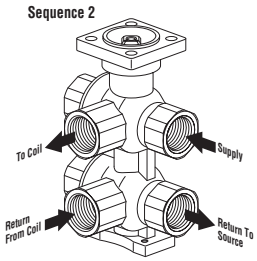

Mode of Operation

The 6-way ePIV is designed for chilled beams, radiant ceiling panels, and 4-pipe fan coil units providing true flow and dynamic balancing. It has the functionality of up to four 2-way control valves and two balancing valves, saving material and installation time.

Product Features

Performs changeover and modulating control for a single coil 4-pipe system. Provides different flow settings for heating and cooling with zero percent leakage saving energy and costs.

Actuator Specifications

Control type	modulating
Power supply	AC/DC 24 V
Manual override	LRX24-LP-EP6
Electrical connection	3 ft. [1 m] cable with ½" conduit fitting
Controllable flow range	90°
Communication	Analog, Belimo MP-Bus, BACnet MS/TP, Modbus RTU, NFC

Valve Specifications

Fluid	chilled or hot water, up to 60% glycol
Flow characteristic	linear
Controllable flow range	
Sequence 1	(0...30° angle) Dead zone 30...60°
Sequence 2	(60...90° angle)
Sizes	½", ¾"
End fitting	NPT
Materials	
Body	nickel plated brass
Ball	chrome plated brass
Stem	nickel plated brass
Seats	Teflon® PTFE
Seat O-rings	EPDM
Characterizing disc	chrome plated steel
Stem O-rings	EPDM
Fluid temperature range	43...180°F [6...82°C]
Body pressure rating	232 psi
Close-off pressure	50 psid
Minimum differential pressure at V'nom	7 psi
Maximum differential pressure	15 psi
Leakage	0%
Rangeability	100:1
Flow control tolerance	±6%
Flow measurement tolerance	±2%

All flow tolerances @ 68...77°F [20...25°C] and 0% glycol.

X_10001 - 04/21 - Subject to change. © Belimo Aircontrols (USA), Inc.

ZoneTight Pressure Independent Zone Valve (PIQCV) Product Range

	Valve Nominal Size		Type	Suitable Actuators	
GPM	Inches	DN [mm]	2-way NPT with PT ports	Non Fail-Safe	Fail-Safe
0.9*	½	15	Z2050QPT-B	CQ Series	CQK Series
2.0*	½	15	Z2050QPT-D		
4.3*	½	15	Z2050QPT-F		
9.0*	¾	20	Z2075QPT-G		

*Maximum flow value can be field adjusted, see actuator instructions.
Order "X" model actuators for Factory Clip Setting, see instruction manual for details.

5-year warranty

	Clip Position for Flow Adjustment (GPM)							
	1	2	3	4	5	6	N	No Clip
Z2050QPT-B (½")	N/A	N/A	N/A	N/A	0.4	N/A	0.8	0.9
Z2050QPT-D (½")	0.2	0.3	0.4	0.6	0.9	1.3	1.8	2.0
Z2050QPT-F (½")	N/A	0.6	0.8	1.3	1.9	2.8	3.6	4.3
Z2075QPT-G (¾")	N/A	1.8	2.7	3.7	4.9	6.3	7.7	9.0
Actuator Runtime	30 s	37 s	43 s	49 s	55 s	62 s	68 s	75 s

For additional intermediate settings see technical documentation or the ZoneTight flow capacity setting tool on www.belimo.ca.

*Specify upon ordering.

**If temperature exceeds 212°F [100°C] operating range due to a boiler control failure the valve will safely contain the hot water but manufacturer's product warranty becomes invalid.

Mode of Operation

The ZoneTight Pressure Independent Zone Valve (PIQCV) is a two-way valve which combines the functionality of a control valve and a pressure regulating valve, creating one precise product which is unaffected by pressure variations in a system.

Product Features

Provides constant flow regardless of pressure variations in the system. Simplified valve sizing and selection, no Cv calculations required.

Actuator Specifications

Control type	
-3	on/off, floating point
-SR	modulating, 0.5...10 V*, 2...10 V
Blank	on/off
Manual override	use actuator to turn valve stem
Electrical connection	3 ft. [1 m] cable with ½" conduit fitting screw terminals
Power consumption	
CQ..	0.3 W running, 0.2 W holding
CQK..	2.5 W running, 0.5 W holding
CQ..UP	1 W running, 0.7 W holding
CQK..UP	3.0 W running, 0.5 W holding
Power supply	AC/DC 24 V (AC 110...240 V, UP)
Transformer sizing	
CQ..	0.6 VA
CQK..	5 VA
CQ..UP	2 VA
CQK..UP	7 VA

Valve Specifications

Fluid	chilled or hot water, up to 60% glycol
Flow characteristic	equal percentage
Controllable flow range	75°
Sizes	½", ¾"
End fitting	NPT female
Materials	
Body	forged brass
Ball	stainless steel
Stem	stainless steel
Seats	Teflon® PTFE
O-rings	EPDM
Spring	stainless steel
Fluid temp. range	36...212°F [2...100°C]**
Fluid temp. limit	250°F [120°C]**
Maximum allowable operating temperature	212°F [100°C]**
PT ports	2
Body pressure rating	360 psi
Close-off pressure	200 psid
Differential pressure (ΔP) range	5...50 psid
Leakage	0%
Flow control tolerance	±5%

X_10001 - 04/21 - Subject to change. © Belimo Aircontrols (USA), Inc.

ZoneTight Zone Valve (QCV)
Product Range

		Valve Nominal Size		Type		Suitable Actuators	
	C_V	Inches	DN [mm]	2-way	3-way	Non Fail-Safe	Fail-Safe
NPT	1.4*	½	15	Z2050Q-F		CQB Series	CQKB Series
	5.9*	½	15	Z2050Q-J			
	9.8*	¾	20	Z2075Q-K			
	8.2*	1	25	Z2100Q-K			
	1	½	15		Z3050Q-E		
	2.7	½	15		Z3050Q-H		
	4.6	¾	20		Z3075Q-J		
	4.4	1	25		Z3100Q-J		
Sweat	1.4*	½	15	Z2050QS-F			
	5.9*	½	15	Z2050QS-J			
	9.8*	¾	20	Z2075QS-K			
	8.2*	1	25	Z2100QS-K			
	1	½	15		Z3050QS-E		
	2.7	½	15		Z3050QS-H		
	4.6	¾	20		Z3075QS-J		
	4.4	1	25		Z3100QS-J		

*Maximum flow. Max value can be field adjusted, see actuator instructions.
Order "X" model Actuators for Factory Clip Setting, see Instruction Manual for details.

	Clip Position for Flow Adjustment										No Clip
	1	2	3-	3	4	4+	5	5+	6	N	No end stop
Z2050Q(S)-F (½")	0.1	N/A	0.2	N/A	N/A	0.4	N/A	0.6	0.8	1.2	1.4
Z2050Q(S)-J (½")	0.5	0.7	N/A	1.2	1.7	N/A	2.4	N/A	3.4	4.8	5.9
Z2075Q(S)-K (¾")	0.5	1.0	N/A	1.5	2.3	N/A	3.3	N/A	4.6	6.6	9.8
Z2100Q(S)-K (1")	0.5	0.9	N/A	1.5	2.2	N/A	3.1	N/A	4.3	6	8.2

**If temperature exceeds 212°F [100°C] operating range due to a boiler control failure the valve will safely contain the hot water but manufacturer's product warranty becomes invalid.

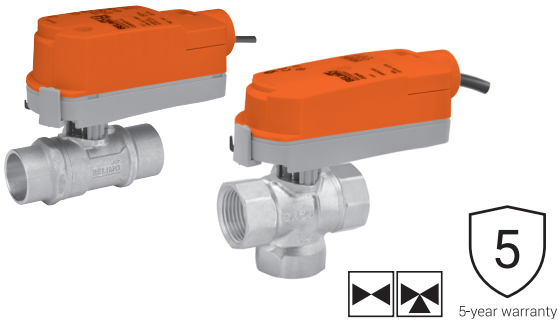

Mode of Operation

The ZoneTight Zone Valve (QCV) is operated by a rotary actuator. The actuators are controlled by a standard voltage for on/off control, a modulating signal, or floating point control system which moves the ball of the valve to the position dictated by the control system.

Product Features

The equal percentage characteristic of the flow is ensured by the design of the ball. This characteristic provides linear heating or cooling output from the coil improving energy efficiency and comfort.

Actuator Specifications

Control type	
-3	on/off, floating point
-SR	modulating, 2...10 V
Blank	on/off
Manual override	use actuator to turn valve stem
Electrical connection	3 ft. [1 m] cable with ½" conduit fitting screw terminals
Power consumption	
CQ..	0.3 W running, 0.2 W holding
CQK..	2.5 W running, 0.5 W holding
CQ..UP	1.0 W running, 0.7 W holding
CQK..UP	3.0 W running, 0.5 W holding
Power supply	AC/DC 24 V (AC 100...240 V, UP)
Transformer sizing	
CQ..	0.6 VA
CQK..	5 VA
CQ..UP	2 VA
CQK..UP	7 VA

Valve Specifications

Fluid	chilled or hot water, 60% glycol
Flow characteristic	equal percentage (2-way) linear (3-way)
Controllable flow range	75° (2-way), 90° (3-way)
Sizes	½", ¾", 1"
End fitting	NPT female sweat
Materials	
Body	forged brass
Ball	chrome plated brass
Stem	brass
Seats	Teflon® PTFE
O-rings	EPDM (lubricated)
Fluid temp. range	36...212°F [2...100°C]**
Fluid temp. limit	250°F [120°C]**
Maximum allowable operating temperature	212°F [100°C]**
Body pressure rating	360 psi
Close-off pressure	75 psid (2-way), 40 psid (3-way)
Maximum differential pressure (ΔP)	40 psid
Leakage	0%

Teflon® is a registered trademark of DuPont™

X_10001 - 04/21 - Subject to change. © Belimo Aircontrols (USA), Inc.

6-Way Characterized Control Valve (CCV) Product Range

		Valve Nominal Size		Type	Suitable Actuators	
Sequence 1 C_V	Sequence 2 C_V	Inches	DN [mm]	6-way NPT	Non Fail-Safe	
0.29	0.29	½	15	B315-029-029	LRB24-SR	LRX24-MFT
0.29	0.46	½	15	B315-029-046		
0.29	0.73	½	15	B315-029-073		
0.29	1.16	½	15	B315-029-116		
0.29	1.50	½	15	B315-029-150		
0.46	0.29	½	15	B315-046-029		
0.46	0.46	½	15	B315-046-046		
0.46	0.73	½	15	B315-046-073		
0.46	1.16	½	15	B315-046-116		
0.46	1.50	½	15	B315-046-150		
0.73	0.29	½	15	B315-073-029		
0.73	0.46	½	15	B315-073-046		
0.73	0.73	½	15	B315-073-073		
0.73	1.16	½	15	B315-073-116		
0.73	1.50	½	15	B315-073-150		
1.16	0.29	½	15	B315-116-029		
1.16	0.46	½	15	B315-116-046		
1.16	0.73	½	15	B315-116-073		
1.16	1.16	½	15	B315-116-116		
1.16	1.50	½	15	B315-116-150		
1.50	0.29	½	15	B315-150-029		
1.50	0.46	½	15	B315-150-046		
1.50	0.73	½	15	B315-150-073		
1.50	1.16	½	15	B315-150-116		
1.50	1.50	½	15	B315-150-150		
1.75	2.0	½	15	B315-175-200		
2.0	1.75	½	15	B315-200-175		
2.0	2.0	½	15	B315-200-200		
0.73	0.73	¾	20	B320-073-073		
0.73	1.16	¾	20	B320-073-116		
0.73	1.86	¾	20	B320-073-186		
0.73	2.9	¾	20	B320-073-290		
1.16	0.73	¾	20	B320-116-073		
1.16	1.16	¾	20	B320-116-116		
1.16	1.86	¾	20	B320-116-186		
1.16	2.9	¾	20	B320-116-290		
1.86	0.73	¾	20	B320-186-073		
1.86	1.16	¾	20	B320-186-116		
1.86	1.86	¾	20	B320-186-186		
1.86	2.9	¾	20	B320-186-290		
2.9	0.73	¾	20	B320-290-073		
2.9	1.16	¾	20	B320-290-116		
2.9	1.86	¾	20	B320-290-186		
2.9	2.9	¾	20	B320-290-290		
2.9	4.0	¾	20	B320-290-400		
2.9	4.7	¾	20	B320-290-470		
4.0	2.9	¾	20	B320-400-290		
4.0	4.0	¾	20	B320-400-400		
4.0	4.7	¾	20	B320-400-470		
4.9	2.9	¾	20	B320-490-290		
4.9	4.0	¾	20	B320-490-400		
4.9	4.7	¾	20	B320-490-470		
7.4	7	1	25	B325-740-700	NRB24-SR	NRX24-MFT

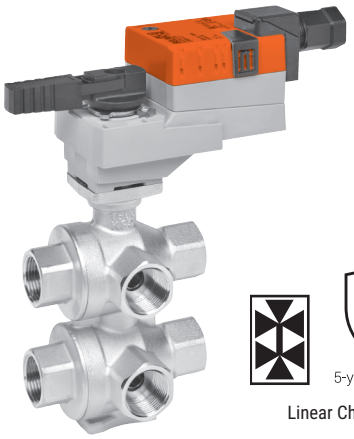

5-year warranty

Linear Characteristic

Mode of Operation

The 6-way CCV has the functionality four 2-way control valves, and each sequence is controlled individually by the electronic actuator's rotary movement. The valve is bubble-tight in the closed position preventing energy losses and helps reduce operating costs.

Product Features

One valve performs changeover and modulating control for a single coil in a 4 pipe system. True close-off to isolate both heating and cooling loops.

Actuator Specifications

Control type	2...10 V multi-function technology (MFT)
Manual override	LR.., NR..
Electrical connection	3 ft. [1 m] cable with ½" conduit fitting

Valve Specifications

Fluid	chilled or hot water, 60% glycol
Flow characteristic	linear
Controllable flow range	
Sequence 1	(0...30° angle) Dead zone 30...60°
Sequence 2	(60...90° angle)
Sizes	½", ¾", 1"
End fitting	NPT
Materials	
Body	nickel plated brass
Ball	chrome plated brass
Stem	nickel plated brass
Seats	Teflon® PTFE
Seat O-rings	EPDM
Characterizing disc	chrome plated steel
Stem O-rings	EPDM
Fluid temperature range	43...180°F [6...82°C]
Body pressure rating	232 psi
Close-off pressure	50 psid
Maximum differential pressure (ΔP)	15 psid
Leakage	0%

Teflon® is a registered trademark of DuPont™.

Sequence 1

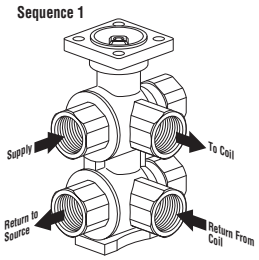

Sequence 2

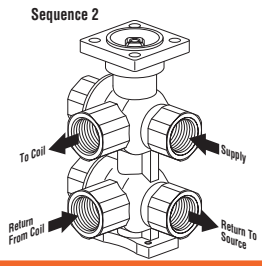

X_10001 - 04/21 - Subject to change. © Belimo Aircontrols (USA), Inc.

Characterized Control Valve (CCV) Product Range

	Valve Nominal Size		Type		Suitable Actuators								
C_V	Inches	DN [mm]	2-way NPT	3-way NPT	Non Fail-Safe		NEMA 4X	Fail-Safe		NEMA 4X	Internet Protocol		
0.3	½	15	B207(B)	B307(B)	TR Series	LR Series	NR Series	TFR Series	LF Series		LR..-IP		
0.46	½	15	B208(B)	B308(B)									
0.8	½	15	B209(B)	B309(B)									
1.2	½	15	B210(B)	B310(B)									
1.9	½	15	B211(B)	B311(B)									
3	½	15	B212(B)	B312(B)									
4.7	½	15	B213(B)	B313(B)									
7.4	½	15	B214(B)										
10	½	15	B215(B)	B315(B)									
16	½	15	B216(B)*	B316(B)*									
4.7	¾	20	B217(B)	B317(B)									
7.4	¾	20	B218(B)	B318(B)									
10	¾	20	B219(B)										
14	¾	20	B220(B)*										
14	¾	20		B320(B)									
24	¾	20	B221(B)*	B321(B)*									
7.4	1	25	B222	B322									
10	1	25	B223	B323									
19	1	25	B224										
30	1	25	B225*	B325*									
10	1¼	32	B229										
19	1¼	32	B230*										
10	1¼	32		B329		AR Series	AR Series		AFR Series	AFR Series	AR..-IP	AKR..-IP	AFR..-IP
19	1¼	32		B330									
25	1¼	32	B231	B331									
37	1¼	32	B232*										
19	1½	40	B238	B338									
29	1½	40	B239	B339									
37	1½	40	B240*	B340									
46	1½	40		B341									
29	2	50	B248	B347									
37	2	50		B348									
46	2	50	B249	B349									
57	2	50	B250*	B350									
65	2	50	B251										
68	2	50		B351									
83	2	50		B352									
85	2	50	B252										
120	2	50	B253										
240	2	50	B254*										

* Models without characterizing discs. (B) Models with chrome plated brass ball and nickel plated brass stem.

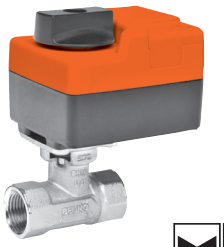

5-year warranty

Equal Percentage Characteristic

Mode of Operation

The Characterized Control Valve is operated by a rotary actuator. The actuators are controlled by a standard voltage for on/off control, a modulating signal, or floating point control system which move the ball of the valve to the position dictated by the control system.

Product Features

The equal-percentage characteristic of the flow is ensured by the integral characterizing disc. This characteristic provides linear heating or cooling output from the coil improving energy efficiency and comfort.

Actuator Specifications

Control type	on/off, floating point, 2...10 V, multi-function technology (MFT)
Manual override	TR, LR, AR, NR, AFR series
Electrical connection	3 ft. [1 m] cable with ½" conduit fitting or covered screw terminal strip

Valve Specifications

Fluid	chilled or hot water, up to 60% glycol
Flow characteristic	A-port equal percentage B-port modified for constant common port flow
Controllable flow range	75°
Sizes	½", ¾", 1", 1¼", 1½", 2"
End fitting	NPT female
Materials	
Body	forged brass, nickel plated
Ball	stainless steel or chrome plated brass
Stem	stainless steel or nickel plated brass
Seats	Teflon® PTFE
Seat O-rings	EPDM
Characterizing disc	
½...1 ½" (2-way)	Tefzel®
½...1" (3-way)	Tefzel®
2" (2-way) B248...B249	Tefzel®
2" (2-way) B251...B253	stainless steel
1¼...2" (3-way)	stainless steel
Stem O-rings	EPDM
Fluid temp. range	0...250°F [-18...+120°C]
Body pressure rating	
2-way	
All ½", ¾", and 1"	600 psi
1¼" up to B230	600 psi
1¼" from B231	400 psi
1½...2"	400 psi
3-way	
All ½", ¾", and 1"	600 psi
1¼...2"	400 psi
Close-off pressure	200 psid
Maximum differential pressure (ΔP)	50 psid
Leakage	0% for A to AB <2.0% for B to AB
Cv rating	B port: 70% of A to AB C_V

Tefzel® and Teflon® are registered trademarks of DuPont™.

X_10001 - 04/21 - Subject to change. © Belimo Aircontrols (USA), Inc.

Characterized Control Valve (CCV) Product Range

	Valve Nominal Size		Type	Suitable Actuators						
C_V	Inches	DN [mm]	2-way NPT	Non Fail-Safe	NEMA 4X	Fail-Safe	NEMA 4X	Internet Protocol		
60	2½	65	B261	AR Series	AR Series	AFR Series	AFR Series	AR...-IP	AKR...-IP	AFR...-IP
75	2½	65	B262							
110	2½	65	B263							
150	2½	65	B264							
210	2½	65	B265*							
70	3	80	B277							
130	3	80	B278							
170	3	80	B280*							

* Models without characterizing disc

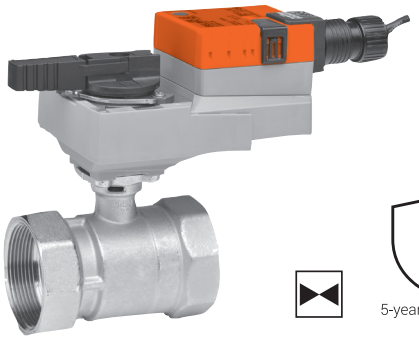

5-year warranty

Equal Percentage Characteristic

Mode of Operation

The Characterized Control Valve is operated by a rotary actuator. The actuators are controlled by a standard voltage for on/off control, a modulating signal, or floating point control system which move the ball of the valve to the position dictated by the control system.

Product Features

The equal-percentage characteristic of the flow is ensured by the integral characterizing disc. This characteristic provides linear heating or cooling output from the coil improving energy efficiency and comfort.

Actuator Specifications

Control type	on/off, floating point, 2...10 V, multi-function technology (MFT)
Manual override	AR and AFR series
Electrical connection	3 ft. [1 m] cable with ½" conduit fitting or covered screw terminal strip

Valve Specifications

Fluid	chilled or hot water, up to 60% glycol
Flow characteristic	A-port equal percentage
Controllable flow range	75°
Sizes	2½", 3"
End fitting	NPT female
Materials	
Body	forged brass, nickel plated
Ball	stainless steel
Stem	stainless steel
Seats	Teflon® PTFE
Seat o-rings	EPDM
Characterizing disc	Tefzel®
Stem o-rings	EPDM
Fluid temp. range	0...212°F [-18...+100°C]
Body pressure rating	400 psi
Close-off pressure	100 psid
Maximum differential pressure (ΔP)	30 psid
Leakage	0% for A to AB

Tefzel® and Teflon® are registered trademarks of DuPont™.

X_10001 - 04/21 - Subject to change. © Belimo Aircontrols (USA), Inc.

Characterized Control Valve (CCV) Product Range

	Valve Nominal Size		2-way Flanged		Suitable Actuators						
C_V	Inches	DN [mm]	ANSI 125	ANSI 250	Non Fail-Safe	NEMA 4X	Fail-Safe	NEMA 4X	Internet Protocol		
70	2½	65	B6250S-070	B6250S-070-250	AR	AR	AFR	AFR	AR..-IP	AFR..-IP	AKR..-IP
110	2½	65	B6250S-110	B6250S-110-250							
110	3	80	B6300S-110	B6300S-110-250							
186	4	100	B6400S-186	B6400S-186-250	GR		GKR	GR / GKR			
290	5	125	B6500S-290	B6500S-290-250							
400	6	150	B6600S-400	B6600S-400-250							

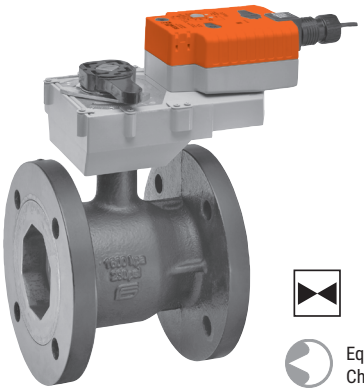

5-year warranty

Equal Percentage Characteristic

Mode of Operation

The Characterized Control Valve is operated by a rotary actuator. The actuators are controlled by a standard voltage for on/off control, a modulating signal, or floating point control system which move the ball of the valve to the position dictated by the control system.

Product Features

The equal-percentage characteristic of the flow is ensured by the integral characterizing disc. This characteristic provides linear heating or cooling output from the coil improving energy efficiency and comfort.

Actuator Specifications

Control type	on/off, floating point, 2...10 V, multi-function technology (MFT)
Manual override	AR, GR, AFR and GKR series
Electrical connection	3 ft. [1 m] cable with ½" conduit fitting or covered screw terminal strip

Valve Specifications

Fluid	chilled or hot water, up to 60% glycol max.
Flow characteristic	A-port equal percentage
Controllable flow range	75°
Sizes	2½", 3", 4", 5", 6"
End fitting	ANSI Class 125 flange, flat face*, ANSI 250
Materials	
Body	cast iron GG25
Ball	stainless steel
Stem	stainless steel
Seats	Teflon® PTFE
Seat o-rings	EPDM rubber
Characterizing disc	stainless steel
Stem o-rings	EPDM
Fluid temp. range	0...250°F [-18...+120°C]
Body pressure rating	ANSI 125, Class B, ANSI 250
Close-off pressure	175 psid, 310 psid (-250)
Maximum differential pressure (ΔP)	50 psid
Leakage	0% for A to AB

*125 psi flanges have a plain flat face and should not be bolted to a raised face flange.
Tefzel® and Teflon® are registered trademarks of DuPont™.

X_10001 - 04/21 - Subject to change. © Belimo Aircontrols (USA), Inc.

High Temperature Characterized Control Valve (HTCCV) Product Range

	Valve Nominal Size		Type	Suitable Actuators			
C_V	Inches	DN [mm]	2-way NPT	Non Fail-Safe		Fail-Safe	
0.29	½	15	B215HT029	TR Series	LR Series	TFR Series	
0.46	½	15	B215HT046				
0.73	½	15	B215HT073				
1.16	½	15	B215HT116				
1.86	½	15	B215HT186				
2.90	½	15	B215HT290				
4.55	½	15	B215HT455				
1.86	¾	20	B220HT186				LF Series
2.90	¾	20	B220HT290				
4.64	¾	20	B220HT464				
7.31	¾	20	B220HT731				
9.28	¾	20	B220HT928				
13.20	¾	20	B220HT1320				
4.64	1	25	B225HT464				
7.31	1	25	B225HT731				
11.60	1	25	B225HT1160				
18.56	1	25	B225HT1856				
28.00	1	25	B225HT2800				

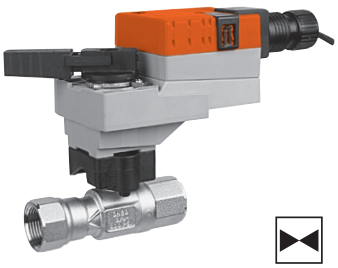

5

5-year warranty

Equal Percentage Characteristic

Mode of Operation

The control valve is operated by an electronic actuator that responds to a standard voltage for on/off, modulating or floating point control system. The actuator will then move the ball of the valve to the position dictated by the control signal or voltage and change the flow.

Product Features

Equal-percentage flow characteristic.

Actuator Specifications	
Control type	on/off, floating point, 2...10 V multi-function technology (MFT)
Manual override	only TR, LR series
Electrical connection	3 ft. [1 m] cable with ½"conduit fitting or covered screw terminal strip
Valve Specifications	
Fluid	hot water, up to 60% glycol, steam
Flow characteristic	A-port equal percentage
Controllable flow range	75°
Sizes	½", ¾", 1"
End fitting	NPT female
Materials	
Body	brass (DZR) P-CuZn35Pb2
Ball	stainless steel
Stem	stainless steel
Seat	ETFE
Stem packing	Viton®
Characterizing disc	ETFE
Seat o-rings	EPDM
Body pressure rating	600 psi
Fluid temperature range	
Steam	250°F [120°C]
Water	60..266°F [16...130°C]
Close-off pressure	200 psid
Maximum differential pressure (ΔP)	
Steam	15 psid
Water	60 psid partially open ball 116 psid full open only (Model #B215HT455)
Maximum inlet pressure	
Steam	15 psi
Leakage	0%

X_10001 - 04/21 - Subject to change. © Belimo Aircontrols (USA), Inc.

Industrial Ball Valve
Product Range

	Valve Nominal Size		Type		Suitable Actuators			
C_V	Inches	DN [mm]	2-way NPT	3-way NPT	Non Fail-Safe			Fail-Safe
1	½	15	B2050VS-01*		LM Series	GR Series		LF Series
2	½	15	B2050VS-02*					
4	½	15	B2050VS-04*					
15	½	15	B2050VS-15*					
30	¾	20	B219VS		NM Series			NF Series
51	¾	20	B220VS					
43	1	25	B224VS					AF Series
68	1	25	B225VS		AM Series			
48	1¼	32	B232VS					
84	1½	40	B239VS		GM Series		PR Series	
177	1½	40	B240VS					
108	2	50	B249VS					
15	½	15	B2050VSS-15*		LM	GR Series		LF
30	¾	20	B219VSS**		NM			NF
43	1	25	B224VSS**		AM			AF Series
108	2	50	B249VSS**		GM		PR Series	
6.4	½	15		B315L***	LR Series			LF Series
12.8	¾	20		B320L***				
11	1	25		B325L***				
34	1¼	32		B332L***	NR			AFR Series
57	1½	40		B340L***	AR Series			
87	2	50		B350L***				

* For hot only or cold only applications. Not for temperature changeover applications.
** NSF/ANSI/CAN 61 Section 8, Annex G, NSF/ANSI 372 - Drinking Water System Components - Lead Content
*** Not for steam applications.

NOTE: Industrial ball valves (B2..VS, B2..VSS) have serviceable components. Proper maintenance of these parts will ensure a longer in-service life for the valves. The seats of these valves will require replacement at an interval consistent with number of full cycles the valve has be operated, or as field condition dictates.

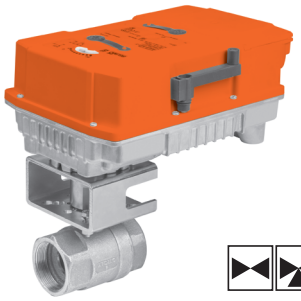

2
2-year warranty

Mode of Operation

The control valve is operated by an electronic actuator that responds to a standard voltage for on/off control, by a modulating, 2...10 V or floating point control system. The actuator will then move the ball of the valve to the position dictated by the control signal thus changing the flow.

Product Features

Modified equal percentage of flow for B2. Modified linear flow for B3.
B3..L valves are for diverting applications and are not rated for steam.

Actuator Specifications

Control type	on/off, floating point, modulating, 2...10 V multi-function technology (MFT)
Manual override	LM, NM, GM, AM, GR, PR, AF, NF, GK
Electrical connection	3 ft. [1 m] cable with ½" conduit fitting, terminal strip

Valve Specifications

Fluid	chilled or hot water, (60% glycol), steam (2-way)
Flow characteristic	modified equal percentage (B2), modified linear (B3..L)
Sizes	½", ¾", 1", 1¼", 1½", 2"
End fitting	FNPT
Materials	
Body	bronze (B2..VS) stainless steel (B2..VSS) nickel plated brass (B3..L)
Ball	stainless steel, bronze (B2050VSS-15) chrome plated brass (B3..L)
Stem	stainless steel nickel plated brass (B3..L)
Seats	
2-way	MPTFE, RPTFE (B2050)
3-way	Teflon PTFE
Stem packing	
2-way NPT	MPTFE
O-rings	NPT EPDM (B3..L)
Fluid temp range	
B2..VS	-22...+280°F [-30...+138°C]
B2..VSS	-22...+298°F [-30...+148°C]
B3..L	0...250°F [-18...+120°C]
Body pressure rating	
3-way	600 psi DN 15...25 (B3..L ½...1") 400 psi DN 32...50 (B3..L 1¼...2")
Maximum inlet pressure	
Steam	35 psi B2..VS 50 psi B2..VSS
Leakage	ANSI Class VI (B2..VS, VSS) 0% (B3..L)

X_10001 - 04/21 - Subject to change. © Belimo Aircontrols (USA), Inc.

V Ball Control Valve
Product Range

	Valve Nominal Size		Type							
C_V	Inches	DN [mm]	2-way NPT	2-way Flanged	Non Fail-Safe			Fail-Safe: Spring Return		Fail-Safe: Electronic
024	1	25	B2100VB-024		AM Series		PR Series	NF Series		PKR Series
055	1½	40	B2150VB-055							
077	2	50	B2200VB-077						AF	
207	3	80		B6300VB-207						GK Series
350	4	100		B6400VB-350		GM		EF		
507	6	150		B6600VB-507						
865	8	200		B6800VB-865						
1550	10	250		B61000VB-1550			SY Series			
1905	12	300		B61200VB-1905						

NOTE: Industrial ball valves have serviceable components. Proper maintenance of these parts will ensure a longer in-service life for the valves. The seats of these valves will require replacement at an interval consistent with number of full cycles the valve has be operated, or as field condition dictates.

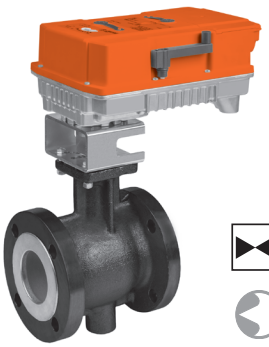

2

2-year warranty

Equal Percentage Characteristic

Mode of Operation

The control valve is operated by an electronic actuator that responds to a standard voltage for on/off control, by a modulating 2...10 V, or floating point control system. The actuator will then move the ball of the valve to the position dictated by the control signal thus changing the flow.

Product Features

Equal percentage of flow

300:1 rangeability

ANSI Leakage Class IV

Actuator Specifications

Control type	on/off, floating point, modulating, 2...10 V multi-function technology (MFT)
Manual override	all models
Electrical connection	3 ft. [1 m] cable with ½" conduit fitting, terminal block

Valve Specifications

Fluid	chilled or hot water, (60% glycol), steam
Flow characteristic	equal percentage
Sizes	1", 1½", 2", 3", 4", 6", 8", 10", 12"
End fitting	NPT female (1...2") ANSI flanged (3...12")
Materials	
Body	carbon steel
Characterizing ball	hardened chrome plated stainless steel
Stem	stainless steel
Seats	Teflon®
O-rings	ALFAS
Stem packing	spring loaded Teflon® V-ring
Bushings	Stanyl PA46
Fluid temp. range	380°F max.
Body pressure rating	NPT ANSI 300 (1...2") Flanged ANSI 150 (3...12")
Close-off pressure	
Water	250 psid
Steam	150 psid
Maximum inlet pressure	
Steam	150 psi
Leakage	ANSI Class IV

X_10001 - 04/21 - Subject to change. © Belimo Aircontrols (USA), Inc.

Potable Water Valve Product Range

2-year warranty

NSF/ANSI 61
NSF/ANSI 372

Ball Valves

		Valve Nominal Size		Type	Suitable Actuators			
	C_V	Inches	DN [mm]	2-way	Non Fail-Safe		Fail-Safe	
NPT	32	½	15	EXT-B2050-PWV-NPT	CQ		CQK	
NPT	49	¾	20	EXT-B2075-PWV-NPT		LR Series		LF Series
NPT	81	1	25	EXT-B2100-PWV-NPT		LR Series		LF Series
Press Fit	32	½	15	EXT-B2050-PWV-PF	CQ		CQK	
Press Fit	49	¾	20	EXT-B2075-PWV-PF		LR Series		LF Series
Press Fit	81	1	25	EXT-B2100-PWV-PF		LR Series		LF Series

Butterfly Valves

		Valve Nominal Size		Type	Suitable Actuators							
C_V @ 90°	C_V @ 60°	Inches	DN [mm]	2-way	Non Fail-Safe			Fail-Safe			N4			
115	44	2	50	EXT-LD14102BE1AX	AM Series			AF Series			GR Series		GK Series	
196	75	2½	65	EXT-LD14125BE1AX	AM Series			AF Series			GR Series		GK Series	
302	116	3	80	EXT-LD14103BE1AX		GM			GK					
600	230	4	100	EXT-LD14104BE1AX			DR Series			DK Series		DR Series		DK Series
1022	392	5	125	EXT-LD14105BE1AX			DR Series			DK Series		DR Series		DK Series
1579	230	6	150	EXT-LD14106BE1AX			DR Series			DK Series		DR Series		DK Series

Mode of Operation

The potable water valve is operated by a rotary actuator. The actuator is controlled by standard voltage for on/off or floating point control system which move the ball of the valve to the position dictated by the control system.

Product Features

NSF/ANSI 61 - Water Quality

NSF/ANSI 372 - Lead Free

Actuator Specifications

Control type	on/off, floating point
Manual override	LR, AM, AF, GM, GR, GK, DR, DK series
Electrical connection	3 ft. [1 m] cable with ½" conduit fitting, terminal block

Valve Specifications

Fluid	potable water
Flow characteristic	full port
Sizes	½", ¾", 1", 2", 2½", 3", 4", 5", 6"
End fittings	
Ball Valve	NPT female, press fit
Butterfly Valve	for ASME/ANSI Class 125/150 flange
Materials - Ball Valve	
Body	lead free brass
Characterizing ball	chrome plated lead free brass
Stem	lead free brass
Seats	PTFE
O-rings	EPDM
Materials - Butterfly Valve	
Body	ductile iron ASTM A536
Body Finish	black epoxy powder coating
Disc	aluminum bronze
Shaft	416 stainless steel
Seat	EPDM
O-ring	Buna-N
Bushings	RPTFE
Fluid temp. range	
Ball Valves	-4...212°F [-20...100°C]
Butterfly Valves	-20...250°F [-32...120°C]
Body pressure rating	NPT, 600 psi press fit, 250 psi flanged, 200 psi
Close-off pressure	200 psid
Maximum operating pressure	
Ball Valve	230 psi
Butterfly Valve	200 psi
Leakage	0%
Dead end service	
Butterfly Valves	bidirectional approved

X_10001 - 04/21 - Subject to change. © Belimo Aircontrols (USA), Inc.

Globe Valve
Product Range

	Valve Nominal Size		Type		Suitable Actuators		
						Fail-Safe	
C_v	Inches	DN [mm]	2-way NPT	3-way NPT	Non Fail-Safe	Spring Return	Electronic
0.4	½	15	G215B-C		LV Series	LF Series	LVK Series
0.4	½	15	G215S-C				
1.3	½	15	G215B-F				
1.3	½	15	G215S-F				
2.2	½	15	G215B-G				
2.2	½	15	G215S-G				
4.4	½	15	G215B-J				
4.4	½	15	G215S-J				
5.5	¾	20	G220B-J				
5.5	¾	20	G220S-J				
7.5	¾	20	G220B-K				
7.5	¾	20	G220S-K				
10	1	25	G225B-K				
10	1	25	G225S-K				
14	1	25	G225B-L				
14	1	25	G225S-L				
20	1¼	32	G232B-M				
20	1¼	32	G232S-M				
28	1½	40	G240B-N			NF Series	
28	1½	40	G240S-N				
40	2	50	G250B-N				
40	2	50	G250S-N				
2.2	½	15		G315B-G	SV Series		SVK Series
4.4	½	15		G315B-J			
6.75	¾	20		G320B-K			
14	1	25		G325B-L			
20	1¼	32		G332B-M			
28	1½	40		G340B-N		AF Series	
40	2	50		G350B-N			

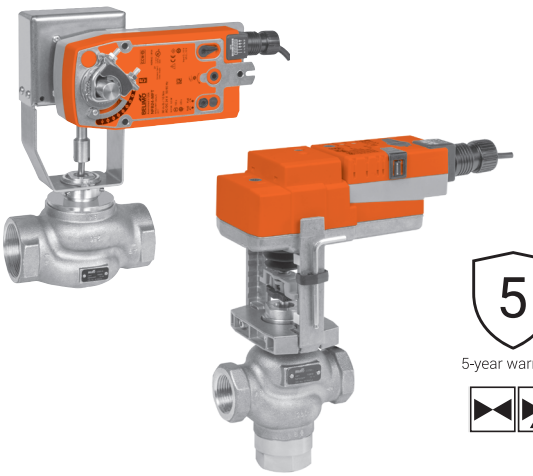

5

5-year warranty

Mode of Operation

The control valve is operated by an electronic actuator that responds to a standard voltage for on/off control, by a modulating 2...10 V/ 4...20 mA, floating point control system. The actuator will then move the plug of the valve to the position dictated by the control signal thus changing the flow.

Product Features

New G2 and G3 globe valves offer a modified equal percentage flow characteristic for a wide variety of HVAC applications. Capable of being used for heating, cooling, and steam service. Repack kits are available to extend the life of the valve without full replacement.

Actuator Specifications

Control type	on/off, floating point, 2...10 V, multi-function technology (MFT)
Manual override	all models except LF
Electrical connection	3 ft [1 m] cable with ½" conduit fitting

Valve Specifications

Fluid	chilled or hot water, 60% glycol, steam
Flow characteristic	modified equal percentage G3: linear flow from B to AB
Sizes	½", ¾", 1", 1¼", 1½", 2"
End fitting	NPT female
Materials	
Body	bronze
Stem	stainless steel
Plug	G2B, G3B: brass G2S: stainless steel
Seat	G2B, G3B: bronze G2S: stainless steel
Stem packing	EPDM O-ring
Fluid temp. range	G2B, G3B: 20...280°F [-7...+138°C] G2S: 20...338°F [-7...+170°C]
Body pressure rating	ANSI Class 250
Maximum inlet pressure	
Steam	G2B: 35 psi [241 kPa] G2S: 100 psi [690 kPa]
Maximum differential pressure (ΔP)	G2B: 35 psid [241 kPa] G2S: 50 psid [345 kPa]
Leakage	ANSI Class VI
Rangeability	100:1

X_10001 - 04/21 - Subject to change. © Belimo Aircontrols (USA), Inc.

Globe Valve, 2-way
Product Range

	Valve Nominal Size		Type	Suitable Actuators		
					Fail-Safe	
C_V	Inches	DN [mm]	2-way Flanged	Non Fail-Safe	Spring Return	Electronic
65	2½	65	G665C	EV Series	AF Series	AVK Series
65	2½	65	G665CS			
65	2½	65	G665C-250			
65	2½	65	G665CS-250			
65	2½	65	G665LCS			
90	3	80	G680C			
90	3	80	G680CS			
90	3	80	G680C-250			
90	3	80	G680CS-250			
90	3	80	G680LCS			
170	4	100	G6100C			
170	4	100	G6100CS			
170	4	100	G6100C-250			
170	4	100	G6100CS-250			
170	4	100	G6100LCS			
263	5	125	G6125C			
263	5	125	G6125CS			
263	5	125	G6125C-250			
263	5	125	G6125CS-250			
263	5	125	G6125LCS			
344	6	150	G6150C			
344	6	150	G6150CS			
344	6	150	G6150C-250			
344	6	150	G6150CS-250			
344	6	150	G6150LCS			

The G...(C)(CS)(LCS) Series valve is a pressure compensated valve that allows high close-off ratings while utilizing standard actuation.

5

5-year warranty

Mode of Operation

The control valve is operated by an electronic actuator that responds to a standard voltage for on/off control, a modulating 2...10 V/4...20 mA, or floating point control system. The actuator will then move the plug of the valve to the position dictated by the control signal thus changing the flow.

Product Features

Equal percentage and linear flow curve options available for a wide variety of HVAC applications. Capable of being used for heating, cooling, and steam service. Repack and rebuild kits are available to extend the life of the valve without full replacement.

Actuator Specifications

Control type	on/off, floating point, 2...10 V multi-function technology (MFT)
Manual override	all models
Electrical connection	3 ft [1 m] cable with ½" conduit fitting

Valve Specifications

Fluid	chilled or hot water, 60% glycol, steam
Flow characteristic	
G6	A-port equal percentage
G6LCS	linear
Sizes	2½", 3", 4", 5", 6"
End fitting	ANSI flanged
Materials	
Body	cast iron
Stem	stainless steel
Plug	
G6	bronze
G6S	stainless steel
Seat	stainless steel
Stem packing	
G6	bronze trimmed: NLP (EPDM)
G6S	stainless trimmed: NLP (EPDM)
Fluid temp. range	refer to valve specification pages in the Product Guide and Price List
Body pressure rating	
G6, 125# ANSI flange	125 psi
G6, 250# ANSI flange	250 psi
Maximum inlet pressure	
Water	150 psi [1034 kPa] G6C, G6CS 250 psi [1724 kPa] G6C..250, G6CS..250
Steam	35 psi [241 kPa] G6C, G6C..250 100 psi [690 kPa] G6CS, G6CS..250
Maximum differential pressure (ΔP)	
Water	25 psid [172 kPa] G6C, G6C..250 50 psid [345 kPa] G6CS, G6CS..250
Steam	15 psid [103 kPa] G6C, G6C..250
Rangeability	85:1 (G665..), 91:1 (G680..) 98:1 (G6100..), 100:1 (G6125..) 98:1 (G6150..)

X_10001 - 04/21 - Subject to change. © Belimo Aircontrols (USA), Inc.

Globe Valve, 3-way
Product Range

	Valve Nominal Size			Suitable Actuators			
C_V	Inches	DN [mm]	3-Way Flanged	Non Fail-Safe	Fail-Safe		
					Spring Return	Electronic	
68	2½	65	G765	EV / RV Series	AF Series	AVK Series	GK Series
68	2½	65	G765S				
68	2½	65	G765-250				
68	2½	65	G765S-250				
85	3	80	G780				
85	3	80	G780S				
85	3	80	G780-250				
85	3	80	G780S-250				
190	4	100	G7100				
190	4	100	G7100S				
190	4	100	G7100-250				
190	4	100	G7100S-250				
280	5	125	G7125	RV Series			
280	5	125	G7125S				
280	5	125	G7125-250				
280	5	125	G7125S-250				
340	6	150	G7150				
340	6	150	G7150S				
340	6	150	G7150-250				
340	6	150	G7150S-250				
68	2½	65	G765D	EV Series	AF Series	AVK Series	
68	2½	65	G765DS				
68	2½	65	G765DS-250				
85	3	80	G780D				
85	3	80	G780DS				
85	3	80	G780DS-250				
154	4	100	G7100D				
154	4	100	G7100DS				
154	4	100	G7100DS-250				
195	5	125	G7125D				
195	5	125	G7125DS				
195	5	125	G7125DS-250				
248	6	150	G7150D				
248	6	150	G7150DS				
248	6	150	G7150DS-250				

5

5-year warranty

Mode of Operation

The control valve is operated by an electronic actuator that responds to a standard voltage for on/off control, a modulating 2...10 V/4...20 mA, or floating point control system. The actuator will then move the plug of the valve to the position dictated by the control signal thus changing the flow.

Product Features

Equal percentage (G6) and linear (G7) flow curve options available for a wide variety of HVAC applications. Capable of being used for heating, cooling, and steam service. Repack and rebuild kits are available to extend the life of the valve without full replacement.

Actuator Specifications

Control type	on/off, floating point, 2...10 V multi-function technology (MFT)
Manual override	all models
Electrical connection	3 ft [1 m] cable with ½" conduit fitting

Valve Specifications

Fluid	chilled or hot water, 60% glycol
Flow characteristic	linear
Sizes	2½", 3", 4", 5", 6"
End fitting	ANSI flanged
Materials	
Body	cast iron
Stem	stainless steel
Plug	
G7	bronze
G7S	stainless steel
Seat	stainless steel
Stem packing	
G7	bronze trimmed: NLP (EPDM)
G7..S	stainless trimmed: NLP (EPDM)
Fluid temp. range	refer to valve specification pages in the Product Guide and Price List
Body pressure rating	
G7, 125# ANSI flange	125 psi
G7, 250# ANSI flange	250 psi
Maximum inlet pressure	
Water	150 psi [1034 kPa] G7, G7S 250 psi [1724 kPa] G7..250, G7S..250
Maximum differential pressure (ΔP)	
Water	25 psid [172 kPa] G7, G7..250 50 psid [345 kPa] G7S,G7S..250
Rangeability	50:1

X_10001 - 04/21 - Subject to change. © Belimo Aircontrols (USA), Inc.

Resilient Seat Butterfly Valve Product Range

		2-way			Suitable Actuators					
		Valve Nominal Size		Type	Non Fail-Safe			Fail-Safe		
								Spring Return	Electronic	
C_V 90°	C_V 60°	IN	DN [mm]	2-way	HDU LU	L	HD	HD	L	HD
115	44	2	50	F650			AR, GR Series	AF Series		
196	75	2½	65	F665						
302	116	3	80	F680	AR, GR					GK
600	230	4	100	F6100	GR		DR			DKR
1022	392	5	125	F6125						
1579	605	6	150	F6150	DR			PR Series		PKR Series
3136	1202	8	200	F6200	PR	PR			PKR	
5340	2047	10	250	F6250						
8250	3162	12	300	F6300						
11917	4568	14	350	F6350				SY Series (2 Year Warranty)		
16388	6282	16	400	F6400						
21705	8320	18	450	F6450						
27908	10698	20	500	F6500						
43116	16528	24	600	F6600						

		3-way			Suitable Actuators					
		Valve Nominal Size		Type	Non Fail-Safe			Fail-Safe		
								Spring Return	Electronic	
C_V 90°	C_V 60°	IN	DN [mm]	3-way	HDU	L	HD	HD	L	HD
115	44	2	50	F750			AM, GM Series	AF		
196	75	2½	65	F765						GK Series
302	116	3	80	F780	GM Series					
600	230	4	100	F7100			PR Series			PKR Series
1022	392	5	125	F7125						
1579	605	6	150	F7150						
3136	1202	8	200	F7200		PR			PKR	
5340	2047	10	250	F7250						
8250	3162	12	300	F7300						
11917	4568	14	350	F7350			SY Series (2 Year Warranty)			
16388	6282	16	400	F7400						
21705	8320	18	450	F7450						

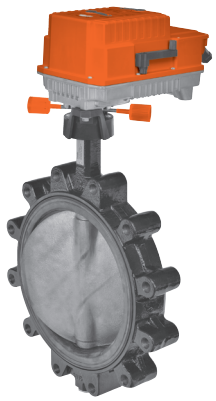

5

5-year warranty

Mode of Operation

Butterfly valves are capable of handling higher flow rates with relatively low pressure loss. These valves may be used for isolation (shut-off) service or throttling service within a range of 0...60 degrees for two-way valves. Butterfly valves are controlled with a maintenance-free electronic actuator or manually with an ergonomic handle or gear operator.

Product Features

The unique disc and seat design ensures positive valve seating while maintaining low seating torque.

Actuator Specifications

Control type	on/off, floating point, modulating, 2...10 V, 4...20 mA, multi-function technology (MFT)
Manual override	all models
Electrical connection	3 ft. [1 m] cable terminal block (-T models)
Communication (PR)	BACnet MS/TP, NFC, listed by BTL, Modbus

Valve Specifications

Fluid	chilled, hot water, 60% glycol
Flow characteristic	F6 modified equal percentage F7 modified linear
Sizes	2...24”
End fitting	for ASME/ANSI Class 125/150 flanges
Materials	
Body	ductile iron ASTM A536
Body finish	polyester powder coat
Disc	304 stainless steel
Shaft	HD Series: 420 stainless steel, 630 stainless steel (14...24”) L Series: 420 stainless steel
Seat	EPDM
O-rings	EPDM
Bushings	HD Series: RPTFE L Series: bronze, steel, PTFE
Fluid (water) temp. range	-22...+250°F [-30...+120°C]
Body pressure rating	232 psi cold working pressure (CWP)
Close-off pressure	
HDU, LU series	50 psid, 3...10”
HD series	200 psid, 2...6” 150 psid, 14...24”
L series	200 psid 8...12”
Rangeability	10:1
Maximum velocity	12 FPS
Leakage	0%

X_10001 - 04/21 - Subject to change. © Belimo Aircontrols (USA), Inc.

Grooved Butterfly Valve Product Range

		2-way			Suitable Actuators					
		Valve Nominal Size		Type	Non Fail-Safe				Fail-Safe	
C_V 90°	C_V 60°	IN	DN [mm]	2-way					Spring Return	Electronic
115	36	2	50	F650VIC	AM Series				AF Series	
260	80	2½	65	F665VIC		GR Series				
440	140	3	80	F680VIC				PR Series		
820	250	4	100	F6100VIC			DR Series			GK
1200	370	5	125	F6125VIC						PKR Series
1800	560	6	150	F6150VIC						
3400	1050	8	200	F6200VIC						
5800	1800	10	250	F6250VIC				SY (2 Year Warranty)		
9000	2790	12	300	F6300VIC						

		3-way						
		Valve Nominal Size		Type	Non Fail-Safe		Fail-Safe	
C_V 90°	C_V 60°	IN	DN [mm]	3-way			Spring Return	Electronic
115	36	2	50	F750VIC	GM Series	PR Series	AF	
260	80	2½	65	F765VIC				GK Series
440	140	3	80	F780VIC				PKR Series
820	250	4	100	F7100VIC				
1200	370	5	125	F7125VIC				
1800	560	6	150	F7150VIC				
3400	1050	8	200	F7200VIC		SY Series (2 Year Warranty)		
5800	1800	10	250	F7250VIC				
9000	2790	12	300	F7300VIC				

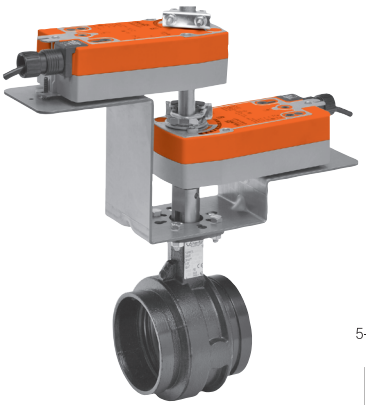

5

5-year warranty

Mode of Operation

Grooved butterfly valves are designed for body pressures ranging from full vacuum to 300 psi and for bi-directional, dead end services to full body pressure. The valve patented seat design ensures full 360° sealing. The pressure enhanced seat compresses to form a larger seating area as the pressure increases. Valve construction and performance meet and exceed MSS-SP-67 requirements.

Product Features

The unique single offset disc and seat design ensures positive valve seating while maintaining low seating torque.

Actuator Specifications

Control type	on/off, floating point, modulating, 2...10 V, 4...20 mA, multi-function technology (MFT)
Manual override	all models
Electrical connection	3 ft. [1 m] cable terminal block (-T models)
Communication (PR)	BACnet MS/TP, (BTL certified), NFC, Modbus

Valve Specifications

Fluid	chilled, hot water, 60% glycol
Flow characteristic	F6 modified equal percentage F7 modified linear
Sizes	2...12"
End fitting	grooved ANSI/AWWA (C606)
Materials*	
Body	ductile iron ASTM A536, grade 65-45-12
Body finish	black alkyd enamel
Disc	electrolysis nickel coated ductile iron
Shaft	416 stainless steel
Seat	EPDM
Bearings	fiberglass with TFE lining
Fluid temp. range	-22...+250°F [-30...+120°C]
Body pressure rating	300 psi
Close-off pressure	200 psid (for most combinations)
Rangeability	100:1
Maximum velocity	20 FPS
Leakage	0%

*VIC-300™ Masterseal™ is manufactured by the Victaulic Company.

X_10001 - 04/21 - Subject to change. © Belimo Aircontrols (USA), Inc.

High Performance Butterfly Valve Product Range

		2-way Valves			Suitable Actuators							
		Valve Nominal Size	Type		Non Fail-Safe				Fail-Safe			
									Spring Return		Electronic			
C_V 90°	C_V 60°	Inches	ANSI 150 2-way	ANSI 300 2-way	150		300		150	300	150		300	
102	56	2	F650-150SHP	F650-300SHP	GM Series	PR Series	GM Series	PR Series	AF Series	AF Series	GK Series	PKR Series	GK Series	PKR Series
146	80	2½	F665-150SHP	F665-300SHP										
228	125	3	F680-150SHP	F680-300SHP										
451	248	4	F6100-150SHP	F6100-300SHP										
714	392	5	F6125-150SHP	F6125-300SHP										
1103	607	6	F6150-150SHP	F6150-300SHP										
2064	1135	8	F6200-150SHP	F6200-300SHP							SY			
3517	1934	10	F6250-150SHP	F6250-300SHP		SY (2 Year Warranty)		SY (2 Year Warranty)						
4837	2660	12	F6300-150SHP	F6300-300SHP										
6857	3592	14*	F6350-150SHP	F6350-300SHP										
9287	4865	16*	F6400-150SHP											
11400	6270	18*	F6450-150SHP											
14420	7590	20*	F6500-150SHP											
22050	11550	24*	F6600-150SHP											

Note: C_V values listed for ANSI Class 150 Butterfly Valves. Please consult the technical documentation for ANSI Class 300 C_V values and configurations.
*Call Customer Service at 1-800-543-9038 for product availability. Longer lead times may apply.

		3-way Valves			Suitable Actuators							
		Valve Nominal Size	Type		Non Fail-Safe				Electronic Fail-Safe			
C_V 90°	C_V 60°	Inches	ANSI 150 3-way	ANSI 300 3-way	150		300		150		300	
102	56	2	F750-150SHP	F750-300SHP	GM Series	PR Series	GM Series	PR Series	GK Series	PK Series	GK Series	PK Series
146	80	2½	F765-150SHP	F765-300SHP								
228	125	3	F780-150SHP	F780-300SHP								
451	248	4	F7100-150SHP	F7100-300SHP								
714	392	5	F7125-150SHP	F7125-300SHP								
1103	607	6	F7150-150SHP	F7150-300SHP								
2064	1135	8	F7200-150SHP	F7200-300SHP								
3517	1934	10	F7250-150SHP	F7250-300SHP		SY Series (2 Year Warranty)		SY Series (2 Year Warranty)				
4837	2660	12	F7300-150SHP	F7300-300SHP								
6857	3592	14*	F7350-150SHP									

Note: C_V values listed for ANSI Class 150 Butterfly Valves. Please consult the technical documentation for ANSI Class 300 C_V values and configurations.
*Call Customer Service at 1-800-543-9038 for product availability. Longer lead times may apply.

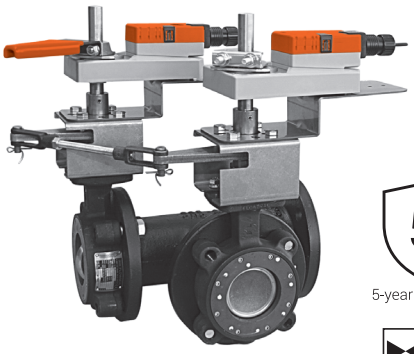

5
5-year warranty

Mode of Operation

High performance butterfly valves are designed for modulating and isolation service and feature a machined seat design and blow out proof solid shaft, providing better torque consistency, which offers longer actuator life and reduced risk of leakage. Available for a variety of high temperature and pressure ratings i.e., ASME/ANSI Class 300 or 150. Valve sizes range from 2...24 inches, with rangeabilities of 100:1, 0% leakage ratings, and a maximum valve velocity of 32 FPS.

Product Features

Unique body seat and double offset disc design ensures positive valve sealing to help assure leak free performance in water applications while maintaining low seating torque.

Actuator Specifications

Control type	on/off, floating point, modulating, 2...10 V, 4...20 mA, multi-function technology (MFT)
Manual override	all models
Electrical connection	3 ft. [1 m] cable terminal block (-T models)
Communication (PR)	BACnet MS/TP (BTL certified), NFC, Modbus

Valve Specifications

Fluid	chilled or hot water, 60% glycol, steam to 50 psi
Flow characteristic	F6 modified equal percentage, unidirectional F7 modified linear, unidirectional
Sizes	2...24”
End fitting	ASME/ANSI Class 150 or 300
Materials	
Body	carbon steel full lug
Disc	316 stainless steel
Shaft	17-4 PH stainless
Seat	RTFE
Gland seal	TFE
Bearings	glass backed PTFE
Fluid temp. range	-22...+400°F [-30...+204°C]
Body pressure rating	150 SHP: ASME/ANSI Class 150 300 SHP: ASME/ANSI Class 300
Close-off pressure	150: 285 psid, 300: 600 psid (max)
Rangeability	100:1
Maximum velocity	32 FPS
Leakage	0%

Double Dead End Service: Utilizes larger retainer ring set screws to allow the valve to be placed at the end of the line without a down stream flange in either flow direction while still holding full pressure.

The SHP series are Flowseal® valves manufactured by the CRANE company.

X_10001 - 04/21 - Subject to change. © Belimo Aircontrols (USA), Inc.

Piping Package
Product Range

	Valve Nominal Size		Hoses	Union	Isolation Valve	Manual Balancing Valve	Strainer
Valve Series	**Inches**	**DN [mm]**	**Lengths**	**Body End/ Tailpiece End**	**Body End/ Tailpiece End**	**Body End/ Tailpiece End**	**Body End/ Tailpiece End**
PIQCV 2-Way	½	15	12", 18", 24"	F-NPT, Sweat, Press Fit/ M-NPT	F-NPT, Sweat, Press Fit/ M-NPT		F-NPT, Sweat, Press Fit/F-NPT, M-NPT
	¾	20	12", 18", 24"				
ePIV / EV 2-Way	½	15	12", 18", 24"				
	¾	20	12", 18", 24"				
	1	25	12", 18", 24"				
	1¼	32	18", 24", 36"				
	1½	40	18", 24", 36"				
	2	50	24", 36"				
CCV 2-Way	½	15	12", 18", 24"			F-NPT, Sweat, Press Fit/M-NPT	
	¾	20	12", 18", 24"				
	1	25	12", 18", 24"				
	1¼	32	18", 24", 36"				
	1½	40	18", 24", 36"				
	2	50	24", 36"				
CCV 3-Way	½	15	12", 18", 24"		F-NPT, Sweat, Press Fit/ M-NPT		
	¾	20	12", 18", 24"				
	1	25	12", 18", 24"				
	1¼	32	18", 24", 36"				
	1½	40	18", 24", 36"				
	2	50	24", 36"				
QCV 2-Way	½	15	12", 18", 24"				
	¾	20	12", 18", 24"				
	1	25	12", 18", 24"				
Zone Valves 2-Way	½	15	12", 18", 24"				
	¾	20	12", 18", 24"				
	1	25	12", 18", 24"				

Hose Technical Specifications

Operating & burst pressure rating	
½"	375 psi operating, *400 psi <195°F [90°C] 1500 psi burst pressure
¾"	300 psi operating, *400 psi <195°F [90°C] 1200 psi burst pressure
1"	225 psi operating 900 psi burst pressure
1¼"	200 psi operating 800 psi burst pressure
1½"	175 psi operating 600 psi burst pressure
2"	150 psi operating 500 burst pressure
Component temperature	-5...+230°F [-20...+110°C] less than 41°F with use of glycol additive

Note: Fluid temperature may be limited by the hose rating

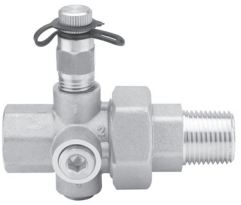

Union Technical Specifications

Service	chilled or hot water, 60% glycol
Sizes	½", ¾", 1", 1¼", 1½", 2"
Pressure/temperature ratings	
½...2"	600 psi
Component temperature	250°F maximum

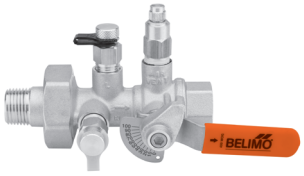

Manual Balance Valve Technical Specifications

Service	chilled or hot water, 60% glycol
Sizes	½", ¾", 1", 1¼", 1½", 2"
Pressure/temperature ratings	
½...2"	400 psi
Component temperature	300°F maximum
Leakage	0%

Strainer Technical Specifications

Service	chilled or hot water, 60% glycol
Sizes	½", ¾", 1", 1¼", 1½", 2"
Pressure/temperature ratings	
½...2"	600 psi
Component temperature	325°F maximum
Leakage	0%

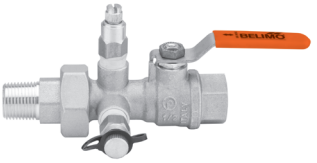

Isolation Valve Technical Specifications

Service	chilled or hot water, 60% glycol
Sizes	½", ¾", 1", 1¼", 1½", 2"
Pressure/temperature ratings	
½...¾"	600 psi
1...2"	500 psi
Component temperature	300°F maximum
Leakage	0%

X_10001 - 04/21 - Subject to change. © Belimo Aircontrols (USA), Inc.

Room Sensor Product Range
Temperature, Humidity, CO_2

		Measuring Values				Additional Features				
		Output Signals (default)	Temperature	Humidity (rH and Dew Point)	CO_2	Setpoint Adjustment Dial	Manual Override	NFC	Customizable Temperature Range	Customizable CO_2 Range
01RT-5B-0	Passive	PT1000	●				●			
01RT-5L-0	Passive	NTC 10k2	●				●			
01RT-5M-0	Passive	NTC10k3	●				●			
01RT-5Q-0	Passive	NTC20k	●				●			
P-01RT-5B-0	Passive	PT1000	●			●	●			
P-01RT-5L-0	Passive	NTC 10k2	●			●	●			
P-01RT-5M-0	Passive	NTC10k3	●			●	●			
P-01RT-5Q-0	Passive	NTC20k	●			●	●			
EXT-RT-SS1000	Passive	PT1000	●							
EXT-RT-SS10K2	Passive	NTC 10k2	●							
EXT-RT-SS10K3	Passive	NTC10k3	●							
EXT-RT-SS20K	Passive	NTC20k	●							
22RT-59-1	Active	0…5 V, 2…10 V, MP-Bus (0…10 V)	●					●	●	
22RTH-59-1	Active	0…5 V, 2…10 V, MP-Bus (0…10 V)	●	●				●	●	
22RTM-59-1	Active	0…5 V, 2…10 V, MP-Bus (0…10 V)	●	●	●			●	●	●

P-01RT-5M-0

22RT-59-1

5

5-year warranty

Belimo's room sensor portfolio includes both passive and active variants. The passive temperature sensors are available with and without setpoint adjustment. All passive versions include a discrete manual override button as standard. All active versions (temperature, humidity, and CO_2) incorporate NFC communication for setup, installation, and commissioning. Selectable humidity measurements include relative humidity and dew point, conforming to ASHRAE 62.1. Belimo's active CO_2 room sensors incorporate dual channel self calibrating technology making them a perfect fit for critical applications and applications that require 24/7 monitoring.

Accuracy	
CO_2	±50 ppm + 2% of measuring value
Humidity	±3% between 20...80% r.H. @ 77°F [25°C]
Temperature Active	±0.9°F @ 77°F [±0.5°C @ 25°C]
Temperature Passive	passive sensors depending on used type Pt.. = ±0.5°F @ 32°F [±0.3°C @ 0°C] NTC.. = ±0.35°F @ 77°F [±0.2°C @ 25°C]
Cable Entry	wire openings at the back side for in-wall wiring and top/bottom for on-wall wiring
Ambient Humidity	max. 95% r.H., non-condensing
Ambient Temperature	30...120°F [0...50°C]
Operating Temperature	30...120°F [0...50°C]
Selectable Humidity	relative humidity and dew point

X_10001 - 04/21 - Subject to change. © Belimo Aircontrols (USA), Inc.

Duct / Immersion Sensor Product Range
Temperature

Measuring Values			
Temperature		Output Signal Temperature	Probe Length [mm]
01DT-5AH	Passive	PT100	2" [50]
01DT-5AL	Passive	PT100	4" [100]
01DT-5AN	Passive	PT100	6" [150]
01DT-5AP	Passive	PT100	8" [200]
01DT-5AR	Passive	PT100	12" [300]
01DT-5AT	Passive	PT100	18" [450]
01DT-5BH	Passive	PT1000	2" [50]
01DT-5BL	Passive	PT1000	4" [100]
01DT-5BN	Passive	PT1000	6" [150]
01DT-5BP	Passive	PT1000	8" [200]
01DT-5BR	Passive	PT1000	12" [300]
01DT-5BT	Passive	PT1000	18" [450]
01DT-5EH	Passive	Ni1000	2" [50]
01DT-5EL	Passive	Ni1000	4" [100]
01DT-5EN	Passive	Ni1000	6" [150]
01DT-5EP	Passive	Ni1000	8" [200]
01DT-5ER	Passive	Ni1000	12" [300]
01DT-5ET	Passive	Ni1000	18" [450]
01DT-5LH	Passive	NTC10k2	2" [50]
01DT-5LL	Passive	NTC10k2	4" [100]
01DT-5LN	Passive	NTC10k2	6" [150]
01DT-5LP	Passive	NTC10k2	8" [200]
01DT-5LR	Passive	NTC10k2	12" [300]
01DT-5LT	Passive	NTC10k2	18" [450]
01DT-5MH	Passive	NTC10K3	2" [50]
01DT-5ML	Passive	NTC10K3	4" [100]
01DT-5MN	Passive	NTC10K3	6" [150]
01DT-5MP	Passive	NTC10K3	8" [200]
01DT-5MR	Passive	NTC10K3	12" [300]
01DT-5MT	Passive	NTC10K3	18" [450]
01DT-5QH	Passive	NTC20K	2" [50]
01DT-5QL	Passive	NTC20K	4" [100]
01DT-5QN	Passive	NTC20K	6" [150]
01DT-5QP	Passive	NTC20K	8" [200]
01DT-5QR	Passive	NTC20K	12" [300]
01DT-5QT	Passive	NTC20K	18" [450]

Please note: For temperature and humidity sensors, the °F and °C are not direct conversions. °F is the standard range for the United States, and °C is the standard range for Canada and Latin America.

01DT

01DT Optional Accessory
A-22D-A03 Adjustable Duct Mounting Flange

Includes Duct Mounting Kit

A-22P-A60

½" Thermowell adaptor available for retrofit applications. See accessories section in the Product Guide and Price List.

5-year warranty

Duct and immersion temperature sensors for duct and pipe applications provide air or water temperature (with A-22P-A series Thermowell) readings to air handling equipment, unitary HVAC equipment, and central plants. Duct flange mount sensors with adjustable mounting flange are ideal for HVAC equipment that do not require electrical conduit, for example, AHU, FCU, and VAV applications.

Accuracy	PT.. = ±0.5°F @ 32°F [±0.3°C @ 0°C] Ni.. = ±0.7°F @ 32°F [±0.4°C @ 0°C] NTC.. = ±0.35°F @ 77°F [±0.2°C @ 25°C]
Cable Entry	cable gland with strain relief Ø6...8 mm, ½" conduit adapter included
Ambient Temperature	-30...+120°F [-35...+50°C]
Operating Temperature	NTC..= -60...+300°F [-50...+150°C] PT., Ni.. = -60...+320°F [-50...+160°C]
Degree of Protection	NEMA 4X, IP65
Agency Listing	cULus acc. to UL60730-1A/-2-9, CAN/CSA E60730-1:02/-2-9, CE acc. to 2014/30/EU, RoHS acc. to 2011/65/EU, UL Enclosure Type 4X

X_10001 - 04/21 - Subject to change. © Belimo Aircontrols (USA), Inc.

Duct/Immersion Sensor Product Range

Temperature

Measuring Values			Measuring Ranges									Additional Features
				Temperature								
Duct / Immersion Temperature		Output Signals (default)	Multirange	-30...+130°F [-50...+50°C]	0...150°F [0...160°C]	0...100°F [-15...+35°C]	0...250°F [-10...+120°C]	30...480°F [0...250°C]	40...90°F [-20...+80°C]	40...140°F [0...50°C]	40...240°F [0...100°C]	Probe Length [mm]
22DT-52H	Active	0...5 V (0...10 V)	8	●	•	●	●	●	●	●	●	2" [50]
22DT-52L		0...5 V (0...10 V)	8	●	•	●	●	●	●	●	●	4" [100]
22DT-52N		0...5 V (0...10 V)	8	●	•	●	●	●	●	●	●	6" [150]
22DT-52P		0...5 V (0...10 V)	8	●	•	●	●	●	●	●	●	8" [200]
22DT-52R		0...5 V (0...10 V)	8	●	•	●	●	●	●	●	●	12" [300]
22DT-52T		0...5 V (0...10 V)	8	●	•	●	●	●	●	●	●	18" [450]
22DT-54H		4...20 mA	8	●	•	●	●	●	●	●	●	2" [50]
22DT-54L		4...20 mA	8	●	•	●	●	●	●	●	●	4" [100]
22DT-54N		4...20 mA	8	●	•	●	●	●	●	●	●	6" [150]
22DT-54P		4...20 mA	8	●	•	●	●	●	●	●	●	8" [200]
22DT-54R		4...20 mA	8	●	•	●	●	●	●	●	●	12" [300]
22DT-54T		4...20 mA	8	●	•	●	●	●	●	●	●	18" [450]

• Factory setting (setting ranges are configurable on the sensor).

Please note: For temperature and humidity sensors, the °F and °C are not direct conversions. °F is the standard range for the United States, and °C is the standard range for Canada and Latin America.

Active selectable measuring ranges are for application and scaling purposes, please ensure installation is within stated ambient and operating temperature range.

22DT

22DT Optional Accessory
A-22D-A03 Adjustable Duct Mounting Flange

Includes Duct Mounting Kit

A-22P-A60

½" Thermowell adaptor available for retrofit applications. See accessories section in the Product Guide and Price List.

5-year warranty

Duct and immersion temperature sensor for duct and pipe applications provides air or water temperature readings to air handling equipment, unitary HVAC equipment, and central plants.

Accuracy	±1% of upper selected measuring range
Power Supply	DC 15...24 V (± 10%), AC 24 V (± 10%) DC 15...24 V (± 10%) (4...20 mA)
Cable Entry	cable gland with strain relief Ø6...8 mm, ½" conduit adapter included
Ambient Temperature	-30...+120°F [-35...+50°C]
Operating Temperature	-60...+320°F [-50...+160°C]
Degree of Protection	NEMA 4X, IP65
Agency Listing	cULus acc. to UL60730-1A/-2-9, CAN/CSA E60730-1:02/-2-9, CE acc. to 2014/30/EU, RoHS acc. to 2011/65/EU, UL Enclosure Type 4X

X_10001 - 04/21 - Subject to change. © Belimo Aircontrols (USA), Inc.

Duct Averaging Sensor Product Range

Temperature

Measuring Values					Temperature									Additional Features
Duct Averaging Temperature		Output Signals (default)	Multirange	True Averaging	-30...+130°F [-50...+50°C]	0...150°F [0...160°C]	0...100°F [-15...+35°C]	0...250°F [-10...+120°C]	30...480°F [0...250°C]	40...90°F [-20...+80°C]	40...140°F [0...50°C]	40...240°F [0...100°C]		Probe Length [m]
01MT-5B4	Passive	PT1000		●										10 ft [3]
01MT-5B5	Passive	PT1000		●										20 ft [6]
01MT-5E4	Passive	Ni1000												10 ft [3]
01MT-5E5	Passive	Ni1000												20 ft [6]
01MT-5L4	Passive	NTC10k2												10 ft [3]
01MT-5L5	Passive	NTC10k2												20 ft [6]
01MT-5M4	Passive	NTC10K3												10 ft [3]
01MT-5M5	Passive	NTC10K3												20 ft [6]
01MT-5Q4	Passive	NTC20K												10 ft [3]
01MT-5Q5	Passive	NTC20K												20 ft [6]
22MT-524	Active	0...5 V (0...10 V)	8	●	●	●	●	●	●	•	●	●		10 ft [3]
22MT-525	Active	0...5 V (0...10 V)	8	●	●	●	●	●	●	•	●	●		20 ft [6]
22MT-544	Active	4...20 mA	8	●	●	●	●	●	●	•	●	●		10 ft [3]
22MT-545	Active	4...20 mA	8	●	●	●	●	●	●	•	●	●		20 ft [6]

• Factory setting (setting ranges are configurable on the sensor).

Please note: For temperature and humidity sensors, the °F and °C are not direct conversions. °F is the standard range for the United States, and °C is the standard range for Canada and Latin America.

Active selectable measuring ranges are for application and scaling purposes, please ensure installation is within stated ambient and operating temperature range.

22MT and 01MT

Includes Mounting Brackets

5-year warranty

Duct averaging sensors with 10 or 20 foot [3 or 6 meter] probes are for applications where stratified layers of hot and cold air can occur when outside air and return air are mixed. PT1000 and Active versions are true averaging and one continuous RTD across entire length of the probe to combat against air stratification problems.

Accuracy	
22MT	±1% of upper selected measuring range
01MT	PT.. = ±0.5°F @ 32°F [±0.3°C @ 0°C] Ni.. = ±0.7°F @ 32°F [±0.4°C @ 0°C] NTC.. = ±0.35°F @ 77°F [±0.2°C @ 25°C]
Cable Entry	cable gland with strain relief Ø6...8 mm, ½" conduit adapter included
Ambient Temperature	
Passive	-30...+120°F [-35...+50°C]
Active	-30...+120°F [-35...+50°C]
Operating Temperature	
Passive	
PT, Ni	-30...+160°F [-35...+70°C]
NTC	32...120°F [0...50°C]
Active	-30...+160°F [-35...+70°C]
Degree of Protection	NEMA 4X, IP65
Agency Listing	cULus acc. to UL60730-1A/-2-9, CAN/CSA E60730-1:02/-2-9, CE acc. to 2014/30/EU, RoHS acc. to 2011/65/EU, UL Enclosure Type 4X

X_10001 - 04/21 - Subject to change. © Belimo Aircontrols (USA), Inc.

Duct and Pipe Cable Sensor Product Range

Temperature

Measuring Values			Measuring Ranges									Additional Features			
			Temperature												
Cable Temperature		Output Signals (default)	Multirange	-30...+130°F [-50...+50°C]	0...100°F [-15...+35°C]	0...150°F [0...160°C]	0...250°F [-10...+120°C]	30...480°F [0...250°C]	40...90°F [-20...+80°C]	40...140°F [0...50°C]	40...240°F [0...100°C]	Probe Length [mm]	Cable Length [m]	Cable Rating	Adjustable Mounting Flange Included
22CT-52H	Active	0...5 V (0...10 V)	8	●	●	•	●	●	●	●	●	2" [50]	6.5 ft [2]	302°F [150°C]	
22CT-54H		4...20 mA	8	●	●	•	●	●	●	●	●	2" [50]	6.5 ft [2]	302°F [150°C]	
Probe Only															
01CT-5AH	Passive	PT100										2" [50]	6.5 ft [2]	302°F [150°C]	
01CT-5BH		PT1000										2" [50]	6.5 ft [2]	302°F [150°C]	
01CT-5EH		Ni1000										2" [50]	6.5 ft [2]	302°F [150°C]	
01CT-5LH		NTC10k2										2" [50]	6.5 ft [2]	302°F [150°C]	
01CT-5MH		NTC10k3										2" [50]	6.5 ft [2]	302°F [150°C]	
01CT-5QH		NTC20k										2" [50]	6.5 ft [2]	302°F [150°C]	
01CT-5BL		PT1000										4" [100]	6.5 ft [2]	302°F [150°C]	
01CT-5BP		PT1000										8" [200]	6.5 ft [2]	302°F [150°C]	
01CT-5LL		NTC10k2										4" [100]	6.5 ft [2]	302°F [150°C]	
01CT-5LP		NTC10k2										8" [200]	6.5 ft [2]	302°F [150°C]	
01CT-5ML		NTC10k3										4" [100]	6.5 ft [2]	302°F [150°C]	
01CT-5MP		NTC10k3										8" [200]	6.5 ft [2]	302°F [150°C]	
01CT-5QL		NTC20k										4" [100]	6.5 ft [2]	302°F [150°C]	
01CT-5QP		NTC20k										8" [200]	6.5 ft [2]	302°F [150°C]	
01CT-5LH01		NTC10k2										2" [50]	6.5 ft [2]	167°F [75°C]	
01CT-5LL01		NTC10k2										4" [100]	6.5 ft [2]	167°F [75°C]	
01CT-5LP01		NTC10k2										8" [200]	6.5 ft [2]	167°F [75°C]	
01CT-5MH01		NTC10k3										2" [50]	6.5 ft [2]	167°F [75°C]	
01CT-5ML01		NTC10k3										4" [100]	6.5 ft [2]	167°F [75°C]	
01CT-5MP01		NTC10k3										8" [200]	6.5 ft [2]	167°F [75°C]	
01CT-5QH01		NTC20k										2" [50]	6.5 ft [2]	167°F [75°C]	
01CT-5QL01		NTC20k										4" [100]	6.5 ft [2]	167°F [75°C]	
01CT-5QP01		NTC20k										8" [200]	6.5 ft [2]	167°F [75°C]	
Mounting Flange Included															
01CT-5LLF1-4	Passive	NTC10k2										4" [100]	10 ft [3]	167°F [75°C]	●
01CT-5LPF1-4		NTC10k2										8" [200]	10 ft [3]	167°F [75°C]	●
01CT-5MLF1-4		NTC10k3										4" [100]	10 ft [3]	167°F [75°C]	●
01CT-5MPF1-4		NTC10k3										8" [200]	10 ft [3]	167°F [75°C]	●
01CT-5QLF1-4		NTC20k										4" [100]	10 ft [3]	167°F [75°C]	●
01CT-5QPF1-4		NTC20k										8" [200]	10 ft [3]	167°F [75°C]	●

• Factory setting (setting ranges are configurable on the sensor).

Please note: For temperature and humidity sensors, the °F and °C are not direct conversions. °F is the standard range for the United States, and °C is the standard range for Canada and Latin America.

Active selectable measuring ranges are for application and scaling purposes, please ensure installation is within stated ambient and operating temperature range.

22CT

Includes Mounting Plate

Optional Mounting Flange Available for Probe only Cable Sensors

A-22D-A03 (single item)
A022D-A03.1 (bulk pack of 50)

01CT

with Mounting Flange Included

01CT

5-year warranty

Cable temperature sensors with two-inch stainless steel probe are designed to measures air or water temperature for duct and pipe applications.

Accuracy	
22CT	±1% of upper selected measuring range
01CT	PT.. = ±0.5°F @ 32°F [±0.3°C @ 0°C] Ni.. = ±0.7°F @ 32°F [±0.4°C @ 0°C] NTC.. = ±0.35°F @ 77°F [±0.2°C @ 25°C]
Cable Entry	
22CT	DC 15...24 V (± 10%), AC 24 V (± 10%) DC 15...24 V (± 10%) (4...20 mA)
Ambient Temperature	
Passive	-30...+210°F [-35...+100°C]
Active	-30...+120°F [-35...+50°C] See table for maximum cable ratings per part number
Operating Temperature	
Passive	-30...+210°F [-35...+100°C]
Active	-40...+302°F [-40...+150°C]
Degree of Protection	
22CT	NEMA 4X, IP65
01CT	NEMA 4X, IP67
Agency Listing	cULus acc. to UL60730-1A/-2-9, CAN/CSA E60730-1:02/-2-9, CE acc. to 2014/30/EU, RoHS acc. to 2011/65/EU, UL Enclosure Type 4X

X_10001 - 04/21 - Subject to change. © Belimo Aircontrols (USA), Inc.

Low Limit Detection Sensor Product Range
Temperature

Low Limit Detection Temperature (Frost Protection)		Measuring Values: Output Signal: SPDT	Reset: Auto	Reset: Manual	Setpoint Range: 14...54°F [-10...+12°C]	Additional Features: Probe Length [m]
01DTS-504	Switch	●	●		●	10 ft [3]
01DTS-504X	Switch	●		●	●	10 ft [3]
01DTS-505	Switch	●	●		●	20 ft [6]
01DTS-505X	Switch	●		●	●	20 ft [6]

01DTS

Includes Mounting Clips

5

5-year warranty

Duct mounted low-temperature detection sensors with vapor filled copper capillary tube are used to protect water coils from freezing within the air handling equipment. Any section of the capillary tube that is below the setpoint will cause the vapor to condense to a liquid and trip the SPDT contact. Reset option is manual or automatic.

Accuracy	±0.9°F [±0.5°C]
Cable Entry	cable gland cap nut with strain relief Ø6...8 mm
Ambient Temperature	-30...+160°F [-35...+70°C]
Operating Temperature	-30...+160°F [-35...+70°C]
Degree of Protection	NEMA 4, IP65

X_10001 - 04/21 - Subject to change. © Belimo Aircontrols (USA), Inc.

Duct Sensor Product Range
Temperature / Humidity

Measuring Values				Measuring Ranges									Additional Features	
				Temperature					Relative Humidity	Absolute Humidity	Dewpoint	Enthalpy		
Humidity / Temperature	Temperature	Output Signal Temperature (default)	Output Signal Humidity (default)	Multirange	40...140°F [0...50°C]	-40...+160°F [-40...+60°C]	0...100°F [-15...+35°C]	0...200°F [-20...+80°C]	0...100% RH non-condensing	0...50 g/m³ (default) 0...80 g/m³	0...200°F [-20...+80°C] 40...140°F [0...50°C] (default)	0...85 kJ/kg	Communication	Probe Length [mm]
22DTH-51M	Active	0...5 V (0...10 V)	0...5 V (0...10 V)	4	●	●	●	•	•	●	●	●		5.5" [140]
22DTH-53M	Active	4...20 mA	4...20 mA	4	●	●	●	•	•	●	●	●		5.5" [140]
22DTH-51MB	Passive	PT1000	0...5 V (0...10 V)						•	●	●	●		5.5" [140]
22DTH-51ME	Passive	Ni1000	0...5 V (0...10 V)						•	●	●	●		5.5" [140]
22DTH-51ML	Passive	NTC10k2	0...5 V (0...10 V)						•	●	●	●		5.5" [140]
22DTH-51MM	Passive	NTC10k3	0...5 V (0...10 V)						•	●	●	●		5.5" [140]
22DTH-51MQ	Passive	NTC20k	0...5 V (0...10 V)						•	●	●	●		5.5" [140]
22DTH-53MB	Passive	PT1000	4...20 mA						•	●	●	●		5.5" [140]
22DTH-53ME	Passive	Ni1000	4...20 mA						•	●	●	●		5.5" [140]
22DTH-53ML	Passive	NTC10k2	4...20 mA						•	●	●	●		5.5" [140]
22DTH-53MM	Passive	NTC10k3	4...20 mA						•	●	●	●		5.5" [140]
22DTH-53MQ	Passive	NTC20k	4...20 mA						•	●	●	●		5.5" [140]
22DTH-55M	Active	0...5 V (0...10 V)	0...5 V (0...10 V)						•	●	●	●	Modbus RTU	5.5" [140]
22DTH-56M	Active	0...5 V (0...10 V)	0...5 V (0...10 V)						•	●	●	●	BACnet MS/TP	5.5" [140]

• Factory setting (setting ranges are configurable on the sensor).

Please note: For temperature and humidity sensors, the °F and °C are not direct conversions. °F is the standard range for the United States, and °C is the standard range for Canada and Latin America.

Active selectable measuring ranges are for application and scaling purposes, please ensure installation is within stated ambient and operating temperature range.

22DTH

Includes Adjustable Mounting Flange

Belimo's humidity sensors have selectable outputs including relative humidity, absolute humidity, enthalpy and dew point, conforming to ASHRAE's 62.1 standard.

5-year warranty

Duct mounted combination temperature and humidity sensors are factory set to relative humidity to manage occupant comfort settings. Field selectable with absolute humidity output which determines the moisture content, dew point output manages space moisture, enthalpy output defines the amount of outside air for free cooling by the air handling equipment with integrated economizer sequence. Available with active or passive temperature outputs.

Accuracy	
Temperature	Active = ±0.9°F @ 70°F [±0.5°C @ 21°C] PT.. = ±0.5°F @ 32°F [±0.3°C @ 0°C] Ni.. = ±0.7°F @ 32°F [±0.4°C @ 0°C] NTC.. = ±0.35°F @ 77°F [±0.2°C @ 25°C]
Humidity	±2% between 10...90% RH @ 70°F [21°C]
Power Supply	DC 15...24 V (± 10%), AC 24 V (± 10%) DC 15...24 V (± 10%) (4...20 mA)
Cable Entry	cable gland with strain relief Ø6...8 mm, ½" conduit adapter included
Ambient Temperature	-30...+120°F [-35...+50°C]
Operating Temperature	-30...120°F [-35...50°C]
Measurement Types	relative humidity, absolute humidity, dew point, and enthalpy
Degree of Protection	NEMA 4X, IP65
Agency Listing	cULus acc. to UL60730-1A/-2-9/-2-13, CAN/CSA E60730-1:02/-2-9, CE acc. to 2014/30/EU, RoHS acc. to 2011/65/EU, UL Enclosure Type 4X

X_10001 - 04/21 - Subject to change. © Belimo Aircontrols (USA), Inc.

Duct Sensor Product Range

Air Quality

Measuring Values			Measuring Ranges						Additional Features		
			Temperature		Relative Humidity	CO_2		VOC			
CO_2		Output Signals	40...140°F	0...50°C	0...100% RH non-condensing	0...2000 ppm	0...5000 ppm	0...100%	Communication	Probe Length [mm]	Display
22DC-51	Active	0...10 V				●				7" [180]	
22DC-53	Active	4...20 mA				●				7" [180]	
CO_2 / Temperature											
22DTC-51	Active	0...5 V, 0...10 V	●			●				7" [180]	
22DTC-11*	Active	0...5 V, 0...10 V		●		●				7" [180]	
22DTC-53	Active	4...20 mA	●			●				7" [180]	
22DTC-13*	Active	4...20 mA		●		●				7" [180]	
22DTC-5105	Active	0...5 V, 0...10 V	●				●			7" [180]	
22DTC-1105*	Active	0...5 V, 0...10 V		●			●			7" [180]	
CO_2 / Humidity / Temperature											
22DTM-51	Active	0...10 V	●		●	●				7" [180]	
22DTM-11*	Active	0...10 V		●	●	●				7" [180]	
22DTM-5106	Active	0...10 V	●		●	●				7" [180]	LCD
22DTM-1106*	Active	0...10 V		●	●	●				7" [180]	LCD
22DTM-56	Active	0.5...10 V	●		●	●			BACnet MS/TP	7" [180]	
CO_2 / VOC											
22DCV-51	Active	0...5 V, 0...10 V				●		●		7" [180]	
CO_2 / VOC / Mix CO_2 + VOC / Temperature											
22DCK-51	Active	0...5 V, 0...10 V	●			●		●		7" [180]	
22DCK-11*	Active	0...5 V, 0...10 V		●		●		●		7" [180]	
CO_2 / VOC / Temperature											
22DCM-51	Active	0...5 V, 0...10 V	●			●		●		7" [180]	
22DCM-11*	Active	0...5 V, 0...10 V		●		●		●		7" [180]	

*Temperature range configured for degrees Celsius.

22DTM

Includes Adjustable Mounting Flange

5-year warranty

Combined duct mounted air quality sensors for detection of CO_2, VOC, temperature, and humidity. The dual channel CO_2 sensor monitors building occupancy levels and is used to control the amount of outside air supplied by the air handling equipment to ensure air quality and maximize energy savings over the life-cycle of the building.

Accuracy	
Temperature	±0.9 °F @ 70 °F [±0.5 °C @ 21 °C]
Humidity	±2% between 10...90% RH @ 70°F [21°C]
CO_2	±50 ppm and 3% of reading
Power Supply	DC 15...24 V (±10%), AC 24 V (±10%)
Cable Entry	cable gland with strain relief Ø6...8 mm, ½" conduit adapter included
Ambient Temperature	32...120°F [0...50°C]
Operating Temperature	32...120°F [0...50°C]
Degree of Protection	NEMA 4X, IP65
Agency Listing	cULus acc. to UL60730-1A/-2-9, CAN/CSA E60730-1:02/-2-9, CE acc. to 2014/30/EU, RoHS acc. to 2011/65/EU, UL Enclosure Type 4X

X_10001 - 04/21 - Subject to change. © Belimo Aircontrols (USA), Inc.

Duct Switch Product Range
Differential Pressure

Measuring Values			Measuring Ranges				Units
			Pressure				
Differential Pressure Switch		Output Signals (default)	0.08 ...1.20 inch WC [20...300 Pa]	0.20...2 inch WC [50...500 Pa]	0.80...4 inch WC [200...1000 Pa]	2...10 inch WC [500...2500 Pa]	package of 45
01APS-501	Switch	SPDT			●		
01APS-501.1		SPDT			●		●
01APS-504		SPDT				●	
01APS-504.1		SPDT				●	●
01APS-50R		SPDT	●				
01APS-50R.1		SPDT	●				●
01APS-50U		SPDT		●			
01APS-50U.1		SPDT		●			●

01APS

Includes 6.5 ft. [2 m] tubing and two 4" [100 mm] plastic probes

5-year warranty

Duct mounted pressure switches monitor overpressure, vacuum and differential pressure of air or other noncombustible, non-aggressive gases. The differential pressure switches with automatic reset and field adjustable differential setpoint are used in air handling applications to monitor air filter cleanliness and fan status.

Accuracy	See data sheet for Accuracy and Repeatability
Cable Entry	cable gland M20 x 1.5 mm with strain relief Ø6...8 mm, ½" conduit adapter included
Ambient Temperature	-5...+140°F [-20...+60°C]
Operating Temperature	-5...+140°F [-20...+60°C]
Degree of Protection	NEMA 13, IP54
Agency Listing	ETL listed

X_10001 - 04/21 - Subject to change. © Belimo Aircontrols (USA), Inc.

Duct Sensor Product Range

Differential Pressure

Measuring Values				Measuring Ranges																		Additional Features		
				Pressure																				
Differential Pressure Sensor		Output Signals (default)	Multirange	-0.1...0.1 inch WC [-25...25 Pa]	-0.2...0.2 inch WC [-50...50 Pa]	-0.4...0.4 inch WC [-100...100 Pa]	-0.6...0.6 inch WC [-150...150 Pa]	0...0.1 inch WC [0...25 Pa]	0...0.2 inch WC [0...50 Pa]	0...0.4 inch WC [0...100 Pa]	0...1 inch WC [0...250 Pa]	0...2 inch WC [0...500 Pa]	0...4 inch WC [0...1000 Pa]	0...6 inch WC [0...1500 Pa]	0...8 inch WC [0...2000 Pa]	0...10 inch WC [0...2500 Pa]	0...12 inch WC [0...3000 Pa]	0...16 inch WC [0...4000 Pa]	0...20 inch WC [0...5000 Pa]	0...28 inch WC [0...7000 Pa]	Auto Zero - Calibration	Communication	Display
22ADP-58Q	Active	0...5 V (0...10 V, 4...20 mA)	8	●	●	●	●	●	●	●	●													
22ADP-58QA	Active	0...5 V (0...10 V, 4...20 mA)	8	●	●	●	●	●	●	●	●											●		
22ADP-58QB	Active	0...5 V (0...10 V, 4...20 mA)	8	●	●	●	●	●	●	●	●											●		LCD
22ADP-58QL	Active	0...5 V (0...10 V, 4...20 mA)	8	●	●	●	●	●	●	●	●													LCD
22ADP-55Q	Active	0...5 V (0...10 V)	8	●	●	●	●	●	●	●	●												Modbus RTU	
22ADP-55QA	Active	0...5 V (0...10 V)	8	●	●	●	●	●	●	●	●											●	Modbus RTU	
22ADP-55QB	Active	0...5 V (0...10 V)	8	●	●	●	●	●	●	●	●											●	Modbus RTU	LCD
22ADP-55QL	Active	0...5 V (0...10 V)	8	●	●	●	●	●	●	●	●												Modbus RTU	LCD
22ADP-584	Active	0...5 V (0...10 V, 4...20 mA)	8			●				●	●	●	●	●	●	●								
22ADP-584A	Active	0...5 V (0...10 V, 4...20 mA)	8			●				●	●	●	●	●	●	●						●		
22ADP-584B	Active	0...5 V (0...10 V, 4...20 mA)	8			●				●	●	●	●	●	●	●						●		LCD
22ADP-584L	Active	0...5 V (0...10 V, 4...20 mA)	8			●				●	●	●	●	●	●	●								LCD
22ADP-554	Active	0...5 V (0...10 V)	8			●				●	●	●	●	●	●	●							Modbus RTU	
22ADP-554L	Active	0...5 V (0...10 V)	8			●				●	●	●	●	●	●	●							Modbus RTU	LCD
22ADP-556	Active	0...5 V (0...10 V)	8										●	●	●	●	●	●	●	●			Modbus RTU	
22ADP-556L	Active	0...5 V (0...10 V)	8										●	●	●	●	●	●	●	●			Modbus RTU	LCD
22ADP-586	Active	0...5 V (0...10 V, 4...20 mA)	8										●	●	●	●	●	●	●	●				
22ADP-586L	Active	0...5 V (0...10 V, 4...20 mA)	8										●	●	●	●	●	●	●	●				LCD

• Factory setting (setting ranges are configurable on the sensor).

22ADP

Includes 6.5 ft. [2 m] tubing and two 4" [100 mm] plastic probes

EXT-RP-SSRPV
Room pressure pickup plate

Modbus c UL us 5 5-year warranty

Duct mounted pressure sensors monitor overpressure, vacuum and differential pressure of air or other noncombustible, non-aggressive gases. The differential pressure sensors with optional LCD, Modbus communications, true auto-zero or manual calibration are used to control air handler supply and return fan speed, maintain a differential pressure between spaces such as hospital isolation rooms or building entrances.

Accuracy	Refer to datasheet for accuracy on all field selectable pressure ranges
Power Supply	DC 15...24 V (± 10%), AC 24 V (± 10%)
Cable Entry	cable gland with strain relief Ø6...8 mm, ½" conduit adapter included
Ambient Temperature	15...120°F [-10...+50°C]
Operating Temperature	15...120°F [-10...+50°C]
Degree of Protection	NEMA 4X, IP65
Agency Listing	cULus acc. to UL60730-1A/-2-6, CAN/CSA E60730-1:02, CE acc. to 2014/30/EU, RoHS acc. to 2011/65/EU, UL Enclosure Type 4X

X_10001 - 04/21 - Subject to change. © Belimo Aircontrols (USA), Inc.

Pipe Sensor Product Range
Temperature

Measuring Values			Measuring Ranges									Additional Features
				Temperature								
Temperature		Output Signals (default)	Multirange	-30...+130°F [-50...+50°C]	0...250°F [-10...+120°C]	0...100°F [-15...+35°C]	40...90°F [-20...80°C]	40...140°F [0...50°C]	0...150°F [0...160°C]	40...240°F [0...100°C]	30...480°F [0...250°C]	Cable Length [m]
01ST-5A3	Passive	PT100										6.5 ft. [2]
01ST-5B3		PT1000										6.5 ft. [2]
01ST-5E3		Ni1000										6.5 ft. [2]
01ST-5L3		NTC10k2										6.5 ft. [2]
01ST-5M3		NTC10K3										6.5 ft. [2]
01ST-5Q3		NTC20K										6.5 ft. [2]
01HT-5A	Passive	PT100										
01HT-5B		PT1000										
01HT-5E		Ni1000										
01HT-5L		NTC10k2										
01HT-5M		NTC10K3										
01HT-5Q		NTC20K										
22HT-52	Active	0...5 V (0...10 V)	8	●	●	●	●	●	●	•	●	
22HT-54		4...20 mA	8	●	●	●	●	●	●	•	●	

• Factory setting (setting ranges are configurable on the sensor).

Please note: For temperature and humidity sensors, the °F and °C are not direct conversions. °F is the standard range for the United States, and °C is the standard range for Canada and Latin America.

Active selectable measuring ranges are for application and scaling purposes, please ensure installation is within stated ambient and operating temperature range.

01HT & 22HT

01ST

Includes pipe clamp
(≤ ø 4.33" [110 mm])

See accessories for larger pipe clamp:
A-22P-A42 (≤ ø 9.84" [250 mm])

5-year warranty

01HT and 22HT are surface mounted strap-on temperature sensors that incorporates a spring loaded brass contact to ensure fast response and accurate hydronic temperature readings. 01ST range offers a 2" brass probe arched surface for fast response and has a plenum rated cable. Both models include adjustable pipe clamp.

Accuracy	
Temperature	
01ST, 01HT	PT.. = ±0.5°F @ 32°F [±0.3°C @ 0°C] Ni.. = ±0.7°F @ 32°F [±0.4°C @ 0°C] NTC.. = ±0.35°F @ 77°F [±0.2°C @ 25°C]
22HT	±1% of upper selected measuring range
Power Supply	DC 15...24 V (± 10%), AC 24 V (± 10%) DC 15...24 V (± 10%) (4...20 mA)
Cable Entry	cable gland with strain relief Ø6...8 mm, ½" conduit adapter included
Ambient Temperature	
Passive (01HT)	-30...+120°F [-35...+50°C]
Passive (01ST)	-40...+300°F [-40...+150°C]
Active (22HT)	-30...+120°F [-35...+50°C]
Operating Temperature	
Passive (01HT)	-30...+195°F [-35...+90°C]
Passive (01ST)	-40...+300°F [-40...+150°C]
Active (22HT)	-30...+160°F [-35...+70°C]
Degree of Protection	
01HT	NEMA 4X, IP65
01ST	NEMA 4, IP65
Agency Listing	cULus acc. to UL60730-1A/-2-6, CAN/CSA E60730-1:02, CE acc. to 2014/30/EU, RoHS acc. to 2011/65/EU, UL Enclosure Type 4X cULus acc. to UL60730-1A/-2-9, CAN/CSA E60730-1:02/-2-9, CE acc. to 2014/30/EU, RoHS acc. to 2011/65/EU, UL Enclosure Type 4X

X_10001 - 04/21 - Subject to change. © Belimo Aircontrols (USA), Inc.

Pipe Sensor Product Range
Condensation

Measuring Values			Additional Features	
Condensation		Output Signals (default)	Cable Length [m]	Remote Probe
22HH-50	Switch	SPDT		
22HH-500X		SPDT	6.5 ft. [2]	●

Includes Mounting Ties

22HH-500X

5-year warranty

Condensation sensor with LED indication has a SPDT switched contact to prevent condensation on chilled beams or other cold surfaces. Also available with 6.5' [2 m] cable.

Power Supply	DC 15...24 V (±10%), AC 24 V (±10%)
Cable Entry	cable gland with strain relief Ø6...8 mm, ½" conduit adapter included
Ambient Temperature	-5...+120°F [-20...+50°C]
Operating Temperature	-5...+140°F [-20...+60°C]
Degree of Protection	NEMA 4X, IP65
Agency Listing	cULus acc. to UL60730-1A/-2-9, CAN/CSA E60730-1:02/-2-9, CE acc. to 2014/30/EU, RoHS acc. to 2011/65/EU, UL Enclosure Type 4X

X_10001 - 04/21 - Subject to change. © Belimo Aircontrols (USA), Inc.

Pipe Sensor Product Range
Pressure

Measuring Values			Measuring Range			
			Pressure			
Gauge Pressure		Output Signals	0...15 psi	0...50 psi	0...100 psi	0...200 psi
22WP-511	Active	0...10 V	●			
22WP-514		0...10 V		●		
22WP-516		0...10 V			●	
22WP-517		0...10 V				●
22WP-531		4...20 mA	●			
22WP-534		4...20 mA		●		
22WP-536		4...20 mA			●	
22WP-537		4...20 mA				●

22WP

A-22WP-A01 Adaptor
¼" NPT...½" NPT

5

5-year warranty

Pressure sensors incorporate stainless steel strain gauge technology to measure liquids and provide gauge pressure readings for a wide variety of applications in industrial process and HVAC controls.

Accuracy	±0.5% Full Scale @ 77°F [25°C]
Power Supply	DC 15...24 V (±10%), AC 24 V (±10%)
Cable Entry	mvs plug according to DIN EN175301-803 / type A
Thread/Port Connection	¼" NPT (external)
Ambient Temperature	-40...+220°F [-40...+105°C]
Operating Temperature	-40...+255°F [-40...+125°C]
Degree of Protection	NEMA 4, IP65

Pipe Sensor Product Range
Differential Pressure

Measuring Values			Measuring Range			
			Pressure			
Differential Pressure		Output Signals	0...15 psid	0...30 psid	0...50 psid	0...100 psid
22WDP-511	Active	0...10 V	●			
22WDP-512		0...10 V		●		
22WDP-514		0...10 V			●	
22WDP-515		0...10 V				●
22WDP-531		4...20 mA	●			
22WDP-532		4...20 mA		●		
22WDP-534		4...20 mA			●	
22WDP-535		4...20 mA				●

22WDP

See Accessories for ¼" NPT brass and stainless steel pipe adaptors

5

5-year warranty

Differential pressure sensors measure water and or non-aggressive gases are used with the building management system (BMS) to maintain adequate air or water pressure to critical zones.

Accuracy	<±1% of measuring range @ 23...167°F [-5...+75°C]
Power Supply	DC 15...24 V (±10%), AC 24 V (±10%)
Cable Entry	angle plug according to DIN 43650, construction A
Ambient Temperature	15...120°F [-10...+50°C]
Operating Temperature	15...175°F [-10...+80°C]
Thread/Port Connection	¼" NPT (internal)
Degree of Protection	NEMA 4, IP65

X_10001 - 04/21 - Subject to change. © Belimo Aircontrols (USA), Inc.

Pipe Sensor Product Range
Flow

Measuring Values				Flow (GPM)											Body Pressure Rating (psi)			Valve Size
	Flow Sensors		Output Signals	0.07...6.6	0.13...12.4	0.22...21.8	0.35...34.2	0.48...47.5	0.92...91.2	1.52...152	2.15...215	3.80...380	5.94...594	8.55...855	360 psi	ANSI 125	ANSI 250	Inches [mm]
NPT	FM050	Active	0...10 V	●											●			½" [15]
NPT	FM075	Active	0...10 V		●										●			¾" [20]
NPT	FM100	Active	0...10 V			●									●			1" [25]
NPT	FM125	Active	0...10 V				●								●			1¼" [32]
NPT	FM150	Active	0...10 V					●							●			1½" [40]
NPT	FM200	Active	0...10 V						●						●			2" [50]
Flanged	FM250	Active	0...10 V							●						●		2½" [65]
Flanged	FM250-250	Active	0...10 V							●							●	2½" [65]
Flanged	FM300	Active	0...10 V								●					●		3" [80]
Flanged	FM300-250	Active	0...10 V								●						●	3" [80]
Flanged	FM400	Active	0...10 V									●				●		4" [100]
Flanged	FM400-250	Active	0...10 V									●					●	4" [100]
Flanged	FM500	Active	0...10 V										●			●		5" [125]
Flanged	FM500-250	Active	0...10 V										●				●	5" [125]
Flanged	FM600	Active	0...10 V											●		●		6" [150]
Flanged	FM600-250	Active	0...10 V											●			●	6" [150]

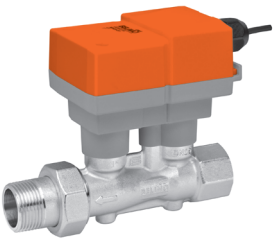

FM
Flow Sensor
For ½...2" pipe size

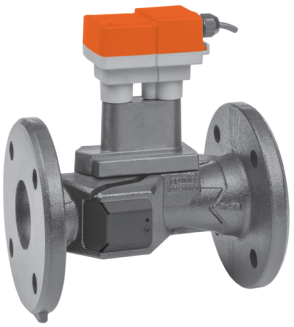

FM
Flow Sensor
For 2½...6" pipe size

5-year warranty

Flow sensors utilizes ultrasonic technology with glycol and temperature compensation to accurately measure water flow for HVAC plant applications and sub-metering of hot or chilled water flow.

Power Supply	AC/DC 24 V
Cable Connection	cable connection with 3ft. [1 m], 18 GA appliance cable
Degree of Protection	NEMA 2, IP54
Fluid	chilled or hot water, up to 60% glycol max, condenser water (open loop/steam not allowed)
End Fitting	NPT female inlet, NPT male outlet
Sensor Housing	nickel plated brass (forged), cast iron
Sensor Housing Pressure Rating	360 psi, ANSI 125, or ANSI 250
Fluid Temp. Range	-4...+250°F [-20...+120°C]
Ambient Temp. Range	-22...+122°F [-30...+50°C]
Inlet Length to Meet Specified Measurement Accuracy	inlet: 5x nominal pipe size (NPS) outlet: no requirement
Flow Sensor Technology	ultrasonic with glycol and temperature compensation
Flow Measurement Tolerance	±2%*
Flow Measurement Repeatability	±0.5%
Agency Listing	cULus: UL 94 D5 E108966, UL Enclosure Type 2

*See data sheet for Accuracy information

X_10001 - 04/21 - Subject to change. © Belimo Aircontrols (USA), Inc.

Outdoor Air Sensor Product Range
Temperature

Measuring Values			Measuring Ranges									Additional Features
				Measuring Range Temperature								
Outdoor Air		Output Signal Temperature (default)	Multirange	30...130°F [-50...+50°C]	-30...+130°F [-50...+50°C]	0...100°F [-15...+35°C]	0...150°F [0...160°C]	0...250°F [-10...+120°C]	30...480°F [0...250°C]	40...90°F [-20...+80°C]	40...240°F [0...100°C]	Probe Length [mm]
01UT-5A	Passive	PT100										
01UT-5B		PT1000										
01UT-5E		Ni1000										
01UT-5L		NTC10k2										
01UT-5M		NTC10K3										
01UT-5Q		NTC20K										
22UT-52	Active	0...5 V (0...10 V)	8	●	●	●	●	●	●	●	●	1" [25]
22UT-54		4...20 mA	8	●	●	●	●	●	●	●	●	1" [25]

• Factory setting (setting ranges are configurable on the sensor).

Please note: For temperature and humidity sensors, the °F and °C are not direct conversions. °F is the standard range for the United States, and °C is the standard range for Canada and Latin America.

Active selectable measuring ranges are for application and scaling purposes, please ensure installation is within stated ambient and operating temperature range.

01UT

A-22D-A09
Included with 01UT/22UT devices

22UT
Includes Mounting Plate

5-year warranty

Outdoor air mounted temperature sensors designed to measure the outside temperature for efficient heating/cooling automation. Equipped with a NEMA 4X / IP65 rated enclosure, snap cover and mounting plate for ease of installation. Available with passive or with an external probe version for active outputs and compatible to major building automation systems.

Accuracy Temperature	
01UT	PT.. = ±0.5°F @ 32°F [±0.3°C @ 0°C] Ni.. = ±0.7°F @ 32°F [±0.4°C @ 0°C] NTC.. = ±0.35°F @ 77°F [±0.2°C @ 25°C]
22UT	±1% of upper selected measuring range
Power Supply	DC 15...24 V (±10%), AC 24 V (±10%) DC 15...24 V (±10%), (4...20 mA)
Cable Entry	cable gland with strain relief Ø6...8 mm, ½" conduit adapter included
Ambient Temperature	
Passive (01UT)	-30...+120°F [-35...+50°C]
Active (22UT)	-30...+120°F [-35...+50°C]
Operating Temperature	
Passive (01UT)	-30...+120°F [-35...+50°C]
Active (22UT)	-30...+120°F [-35...+50°C]
Degree of Protection	NEMA 4X, IP65
Agency Listing	cULus acc. to UL60730-1A/-2-9, CAN/CSA E60730-1:02/-2-9, CE acc. to 2014/30/EU, RoHS acc. to 2011/65/EU, UL Enclosure Type 4X

X_10001 - 04/21 - Subject to change. © Belimo Aircontrols (USA), Inc.

Outdoor Air Sensor Product Range

Temperature / Humidity

Measuring Values					Measuring Range Temperature				Relative Humidity	Absolute Humidity	Dewpoint	Enthalpy	Additional Features	
Outdoor Air	Temperature	Output Signal Temperature (default)	Output Signal Humidity (default)	Multirange	-40...+160°F [-40...+60°C]	0...200°F [-20...+80°C]	40...140°F [0...50°C]	0...100°F [-15...+35°C]	0...100% RH (non condensing)	0...50 g/m³ (default) 0...80 g/m³	0...200°F [-20...+80°C] 40...140°F [0...50°C] (default)	0...85 kJ/kg	Communication	Weather Shield
22UTH-51	Active	0...5 V (0...10 V)	0...5 V (0...10 V)	4	●	•	●	●	•	●	●	●		
22UTH-53	Active	4...20 mA	4...20 mA	4	●	•	●	●	•	●	●	●		
22UTH-510B	Passive	PT1000	0...5 V (0...10 V)						•	●	●	●		
22UTH-510E	Passive	Ni1000	0...5 V (0...10 V)						•	●	●	●		
22UTH-510L	Passive	NTC10k2	0...5 V (0...10 V)						•	●	●	●		
22UTH-510M	Passive	NTC10K3	0...5 V (0...10 V)						•	●	●	●		
22UTH-510Q	Passive	NTC20K	0...5 V (0...10 V)						•	●	●	●		
22UTH-530B	Passive	PT1000	4...20 mA						•	●	●	●		
22UTH-530E	Passive	Ni1000	4...20 mA						•	●	●	●		
22UTH-530L	Passive	NTC10k2	4...20 mA						•	●	●	●		
22UTH-530M	Passive	NTC10K3	4...20 mA						•	●	●	●		
22UTH-530Q	Passive	NTC20K	4...20 mA						•	●	●	●		
22UTH-510X	Active	0...5 V (0...10 V)	0...5 V (0...10 V)	4	●	•	●	●	•	●	●	●		●
22UTH-530X	Active	4...20 mA	4...20 mA	4	●	•	●	●	•	●	●	●		●
22UTH-550X	Active	0...5 V (0...10 V)	0...5 V (0...10 V)						•	●	●	●	Modbus RTU	●
22UTH-560X	Active	0...5 V (0...10 V)	0...5 V (0...10 V)						•	●	●	●	BACnet MS/TP	●

• Factory setting (setting ranges are configurable on the sensor).

Please note: For temperature and humidity sensors, the °F and °C are not direct conversions. °F is the standard range for the United States, and °C is the standard range for Canada and Latin America.

Active selectable measuring ranges are for application and scaling purposes, please ensure installation is within stated ambient and operating temperature range.

22UTH
with weather shield

22UTH

Includes Rain Protector and Mounting Plate

5-year warranty

Outside air mounted combined humidity and temperature sensors with selectable relative humidity, absolute humidity, dewpoint and enthalpy outputs. Optional BACnet and Modbus communications and optional weather/sun shield.

Accuracy	
Temperature	
Active	±0.9°F @ 70°F [±0.5°C @ 21°C]
Passive, PT	±0.5°F @ 32°F [±0.3°C @ 0°C]
Passive, Ni	±0.7°F @ 32°F [±0.4°C @ 0°C]
Passive, NTC	±0.35°F @ 77°F [±0.2°C @ 25°C]
Humidity	±2% between 10...90% RH @ 70°F [21°C]
Power Supply	DC 15...24 V (±10%), AC 24 V (±10%) DC 15...24 V (±10%), (4...20 mA)
Cable Entry	cable gland with strain relief Ø6...8 mm, ½" conduit adapter included
Ambient Temperature	-30...+120°F [-35...+50°C]
Operating Temperature	-30...+120°F [-35...+50°C]
Degree of Protection	NEMA 4X, IP65
Agency Listing	cULus acc. to UL60730-1A/-2-9/-2-13, CAN/CSA E60730-1:02/-2-9, CE acc. to 2014/30/EU, RoHS acc. to 2011/65/EU, UL Enclosure Type 4X

X_10001 - 04/21 - Subject to change. © Belimo Aircontrols (USA), Inc.

Upgrade HVAC Systems Easily

Belimo Smart Retrofit Forms

Over the decades, Belimo has continued to innovate and create customized retrofit solutions for actuators, valves, and sensors that increase performance, efficiency, and reliability with fast delivery backed with a 5-year warranty. When a standard, off-the-shelf retrofit solution is not quite right for our customer needs, our Retrofit team designs a custom solution. Our Retrofit Team and dedicated onsite machine shop will fabricate a solution with only having a completed Smart Retrofit Form.

If you can dream it, Belimo can build it.

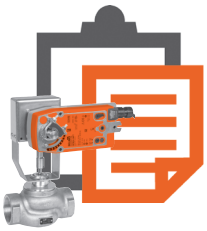

BELIMO®

Sizing and Selection Made Simple

Belimo SelectPro™

SelectPro is a quick and easy online or offline tool for accurately sizing and selecting actuators, valves, sensors, and replacement solutions. The software walks you through step by step, providing optimal product selection.

Discover the advantages
www.belimo.ca

BELIMO®

Belimo Canada Platinum Distributors and Contractors

CANADA Platinum Distributors

Pro Kontrol
1989 Michelin
Laval, Quebec H7L 5B7
Phone: 450-973-7765
www.prokontrol.com

908 Jean-Neveu
Longueuil (Quebec) J4G 2M1
Phone: 450-679-0203

500 Alden Road, Suite #19
Markham, Ontario L3R 5H5
Phone: 905-475-9888

100 Wright Avenue, Unit #23
Dartmouth, Nova Scotia B3B 1L2
Phone: 902-468-5550

850 Pierre-Bertrand, Local 90
Quebec, Quebec G1M 3K8
Phone: 418-682-2421

Regal Controls
3839 Commercial Street
Vancouver, British Columbia V5N 4G1
Phone: 604-879-6357
www.regalcontrols.com

S.C.I. Montreal Inc
1985 Rue Michelin, Laval, QC H7L 5B7
Phone 450-668-8866
www.scimtl.ca

Sinclair Supply
10914 120th Street
Edmonton, Alberta T5H 3P7
Phone: 780-452-3110
www.sinclairsupply.ca

6243 88 Street
Edmonton, Alberta T6E 5T4
Phone: 780-465-9551

#6, 4605 62 Street
Red Deer, Alberta T4N 2R4
Phone: 403-346-5080

4033 9 Street SE
Calgary, Alberta T2G 3C7
Phone: 403-571-6340

11027 92 Avenue
Grande Prairie, Alberta T8V 3J3
Phone: 780-532-1310

1204 33 Street N
Lethbridge, Alberta T1H 5H3
Phone: 403-320-1661

25 – 280 Taiganova Crescent
Fort McMurray, Alberta T9K 0T4
Phone: 780-791-7828

13155 – 82A Avenue
Surrey, British Columbia V3W 9Y6
Phone: 604-543-6310

2254 McGarrigle Road
Nanaimo, British Columbia V9S 4M6
Phone: 250-756-0741

585 Bay Street
Victoria, British Columbia V8T 1P5
Phone: 250-386-4328

749 3rd Avenue
Prince George, British Columbia V2L 3C6
Phone: 250-563-2404

4931 Keith Avenue
Terrace, British Columbia V8G 1K7
Phone: 250-635-5155

808 Laval Crescent
Kamloops, British Columbia V2C 5P3
Phone: 250-372-8898

1820 Kirschner Road
Kelowna, British Columbia V1Y 4N6
Phone: 250-862-3577

1604 6th Avenue
Regina, Saskatchewan S4R 8L7
Phone: 306-569-0627

3125 Miners Avenue
Saskatoon, Saskatchewan S7K 7Z1
Phone: 306-934-3585

1500 King Edward Street
Winnipeg, Manitoba R3H 0R5
Phone: 204-632-4808

WestExcel Automation Ltd.
1825 MacRae Drive East
Regina, SK S4N 0S4
Phone: 306-546-2844
www.westexcel.ca

Wiles-Legault & Associates Ltd.
1260 Old Innes Road, Unit 605
Ottawa, Ontario K1B 3V3
Phone: 613-747-1867
www.wiles-legault.com

Yorkland Controls
2693 Steeles Avenue West
Toronto, Ontario M3J 2Z8
Phone: 416-661-3306
www.yorkland.net

1050 Baxter Road, Unit 6A
Ottawa, Ontario K2C 3P1
Phone: 613-721-3301

855 Matheson Blvd. East, Unit 4
Mississauga, Ontario L4W 2L6
Phone: 905-624-3301

40 Fielding Avenue
Dartmouth, Nova Scotia B3B 1E4
Tel: 902-481-7590

CANADA Platinum Contractors

Advanced Energy Management
60 Dorey Avenue, Suite 103
Dartmouth, Nova Scotia B3B 0B1
Phone: 902-453-4498
www.aemltd.com

222 Edinburgh Drive,
Moncton, New Brunswick E1E 4C7
Phone: 506-857-0818

BSD Solutions Ltd., an Ainsworth Company.
200 - 55 Furniture Park
Winnipeg, Manitoba R2G 3W1
Phone: 204-661-4600
www.bsdsolutions.com

Controls & Equipment Ltd.
185 Millennium Boulevard
Moncton, New Brunswick E1E 2G7
Phone: 506-857-8836
www.controlsequipment.com

245 Hilton Drive, Unit 21
Fredericton, New Brunswick E3B 7B5
Phone: 506-457-0707

48 Hatheway Crescent
Saint John, New Brunswick E2M 5V3
Phone: 506-635-8996

339 St. Patrick Street, Unit 2
Bathurst, New Brunswick E8J 1H8
Phone: 506-545-6291

161 St. Peters Road, Suite 49
Charlottetown, Prince Edward Island C1A 5P7
Phone: 902-566-4212

10 Thornhill Drive, Unit 5
Dartmouth, Nova Scotia B3B 1S1
Phone: 902-468-4885

Centinel Services
22 Duffy Place
St John's, Newfoundland & Labrador A1B 4M5
Phone: 709-579-7373
www.centinel.ca

Control Solutions Ltd.
17 Fawcett Rd, #334,
Coquitlam, British Columbia V3K 6V2
Phone 604-521-9282
www.controlsolutions.ca

Digicon Building Control Solutions
201 Brownlow Avenue, Unit #11
Dartmouth, Nova Scotia B3B 1W2
Phone: 902-468-2633
www.digicon.ns.ca

Durell Control Systems Inc.
95 Enterprise Drive,
London, Ontario N6N 1A6
Phone: 519-685-5432
www.durellcontrols.com

ESC Automation
5265 185A St.
Surrey BC V3S 7A4
Phone: 604-574-7790
www.escautomation.com

3057 Barons Rd.
Nanaimo, BC V9T 3Y6
Phone: 1-800-756-3006

27th Street NE, Suite #104 3639
Calgary, AB T1Y 5E4
Phone: 403-270-0333

18220 102 Ave NW,
Edmonton, AB T5S 1S7
Phone: 780-448-9152

5525 Eglinton Ave W #100,
Etobicoke, ON M9C 5K5
Phone: 647-789-2600

Houle Electric
5050 North Fraser Way
Burnaby, British Columbia V5J 0H1
Phone: 604-434-2681
www.houle.ca

2377 Cienar Drive
Nanaimo, British Columbia V9T 3L6
Phone: 250-758-3011

300A – 2261 Keating Crossroad
Saanichton, British Columbia V8M 2A5
Phone: 250-544-0099

460 Lougheed Road
Kelowna, British Columbia V1X 7R8
Phone: 250-828-7939

3635 Opie Crescent
Prince George, British Columbia V2N 1B9
Phone: 250-562-2009

911 Laval Crescent
Kamloops, British Columbia V2C 5P4
Phone: 250-562-2009

1851 Coulter Road
Campbell River, BC V9W 6H7
Phone: 250-287-2260

780 30 Street
Courtenay, BC V9N 7S7
Phone: 250-339-4808

Jade Logic Building Technologies
16 Stonefield Drive
West Montrose, Ontario N0B 2V0
Phone: 519-669-4254
www.jlbti.com

Les Services Technologiques A.C. Inc.
2185 5e Rue
Saint-Romuald, Quebec G6W 5M6
Phone: 418-834-2777
www.controlesac.com

3174 Boul. Le Corbusier
Laval, Québec H7L 4S8
Phone: 450-973-1665

Regulvar
3986 Boulevard Industriel
Laval, Quebec H7L 4S3
Phone: 450-629-0435
www.regulvar.com

2800, Rue Jean-Perrin, Bureau 100
Quebec, Quebec G2C 1T3
Phone: 418-842-5114

3510 Pharmacy Avenue, Unit 8
Toronto, Ontario M1W 2T7
Phone: 416-422-0531

4101, Boul. Industriel
Sherbrooke, Quebec J1L 2S7
Phone: 819-829-1311

3330, 2e Rue, Bureau 90
Longueil, Quebec J3Y 8Y7
Phone: 450-443-6131

754 Falconbridge Road, Unit 6A
Sudbury, Ontario P3A 5X5
Phone: 705-566-8112

885 Boul. de la Carrière
Gatineau, Quebec J8Y 6S6
Phone: 819-776-6662

1250 Old Innes Road, Unit #518
Ottawa, Ontario K1B 5L3
Phone: 613-565-2129

Serv-All Building Solutions
18120-107 Avenue
Edmonton, Alberta T5S 1K5
Phone: 780-484-6681
www.serv-all.ca

#206, 5126-126th Avenue SE
Calgary, AB T2Z 0H2
Phone: 587-888-2446

#205, 10920-84th Avenue
Grande Prairie, Alberta T8V 6H2
Phone: 780-532-6682

Setpoint Building Automation Inc.
#1 - 16 Spinnaker Way
Concord, Ontario L4K 2T8
Phone: 905-669-8012
www.setpoint.ca

BELIMO

Exceptional service

For over 40 years, Belimo has successfully focused on the heating, ventilation, and air conditioning markets providing quality solutions that will increase energy efficiency and reduce installation costs with the fastest delivery times in the industry. Our innovative products have always been designed to help achieve objectives better, faster, and more economically. Investing in new technology is key to our success, and Belimo will continue to offer products to help businesses succeed.

- 5-year warranty
- 2-year warranty
- Global support
- Tested quality
- On-time delivery
- Extensive service
- Complete product range

X_10001 - 04/21 - Subject to change. © Belimo Aircontrols (USA), Inc

Belimo Americas

USA, Latin America, and the Caribbean: www.belimo.us
Canada: www.belimo.ca
Brazil: www.belimo.com.br

Belimo Worldwide: www.belimo.com